RF

ORANGE COUNTY AMATEUR RADIO CLUB, INC

VOL. LVIII NO. 07 P.O. BOX 3454, TUSTIN, CA 92781-3454 July 2017

The Prez Sez.....

by Tim N6GP

The 300 words or so that I am allotted here cannot begin to describe the fantastic Field Day that we just had. We had great teamwork, camaraderie, lots of fun, and accomplished a great score. Most importantly, we did it all safely.

I am grateful to everyone who made this awesome event happen – my co-leaders Ron W6FPS and Jim AF6N, the band captains, the operators, and especially all of those who helped set up Friday, and tear it all down on Sunday. I also want to thank Ken W6HK for rallying his excellent OC RACES team. We could not have done this large of a Field Day effort without your help. A big kudos to Boy Scout Troop 440 for their scrumptious food. The best ever! Also thanks to you, we maxed out on the Youth Participation Bonus. A huge thank you also goes to Steve KK6REB and Tom W6ETC for transporting our towers and equipment to/from our storage locker.

A highlight for me was all the VIP visitors that we had. Thanks to an invite from Neil N6VHF, Buena Park Mayor Elizabeth Swift visited us on Saturday. She spent a lot of time with us, and it was a pleasure to show her what Amateur Radio can do. The second VIP was Lark Hadley KA4A, who is the regional director of enforcement at FCC for the West Coast. It was nice to meet him. Another memorable VIP was Wayne Overbeck, N6NB. who wheeled in with QRP radio in hand to make some "point blank" QSOs. Tnx for the "1C Orange", Wayne!

This month we will have Wayne Spring W6IRD talk on restoring older radios. He has a wealth of knowledge on this topic, and is considered the foremost guru in Collins equipment… Did you know that he sometimes runs water over old rigs to clean them out (Don't try this at home)? Come and hear other tips like this. 73

Tim Goeppinger N6GP
President OCARC

Next General Meeting

[editor's note – original newsletter issue had an error in presenter for July]

The next OCARC General Meeting will be presented by Wayne Spring W6IRD about:

"Boat Anchor Restoration…"

Wayne is known nationally as one of best restorers of Collins equipment in the ham radio community.

The next General Meeting will be on:

Friday, July 21, 2017
@ 7:00 PM
ENTER from the WEST SIDE entrance of the Red Cross Building, Room 208
Take elevator to the 2nd Floor. *See you there!*

In This Issue: **Page**

Orange County Amateur Radio Club
www.W6ZE.org

2017 Board of Directors:

President:
Tim Goeppinger N6GP
(714) 730-0395
N6GP@w6ze.org

Vice President:
Jim Schultz AF6N
(714) 544-5435
AF6N@w6ze.org

Secretary:
Ron Mudry W6FPS
(714) 840-3613
W6FPS@w6ze.org

Treasurer:
Ken Konechy, W6HHC
(714) 348-1636
W6HHC@w6ze.org

Membership:
Bob Eckweiler AF6C
(714) 639-5074
AF6C@w6ze.org

Activities:
Tim Millard, N6TMT
(714) 744-8909
n6tmt@w6ze.org

Publicity:
Dan Dankert N6PEQ
(714) 599-3841
N6PEQ@w6ze.org

Technical:
Clem Brzoznowski, WØMEC
(714) 927-4065
W0MEC@w6ze.org

Directors-At-Large:
Nicholas Haban AF6CF
(714) 693-9778
AF6CF@w6ze.org

Greg Bohning W6ATB
Unlisted
W6ATB@w6ze.org

2017 Club Appointments:

W6ZE Club License Trustee:
Bob Eckweiler, AF6C
(714) 639-5074
af6c@w6ze.org

Club Historian(s)
Corey Miller KE6YHX
(714) 639-5475
KE6YHX@w6ze.org

Bob Evans, WB6IXN (Emeritus)
(714) 543-9111
WB6IXN@w6ze.org

RF Editor – Rotating (July):
Tom Cowart W6ETC
(714) 454-0571
W6ETC@w6ze.org

Webmaster:
Ken Konechy W6HHC
(714) 348-1636
W6HHC@w6ze.org

Assistant Webmaster:
Bob Eckweiler, AF6C
(714) 639-5074
AF6C@w6ze.org

Tim Millard, N6TMT
(714) 744-8909
N6TMT@w6ze.org

ARRL Awards Appointees:
Arnie Shatz, N6HC
(714) 573-2965
n6hc@aol.com

John Schroeder, N6QQ
(West Orange Co.)
(562) 404-1112
n6qq@msn.com

Contact the Newsletter:
Feedback & Corrections:
rf_feedback@w6ze.org

Submit Articles:
editors@w6ze.org

Monthly Events:

General Meeting:
Third Friday of the month
at 7:00 PM held at:
American Red Cross
600 Parkcenter Drive
Santa Ana, CA
(Near Tustin Ave. & 4th St.)

Club Breakfast (Board Mtg):
Normally First Saturday of month at 8am
Marie Callender's Restaurant
1821 North Grand Ave
Santa Ana, CA
(Between 17th & Santa Clara)

Club Nets (Listen for W6ZE):
28.375 ± MHz SSB
Wed- 7:30 PM - 8:30 PM
Bob AF6C, Net Control
Alt: Corey, KE6YHX, Net Control

146.55 MHz Simplex FM
Wed- 8:30 PM - 9:30 PM
Corey, KE6YHX, Net Control

7.086 ± MHz CW **OCWN**
Sun- 9:00 AM – 10 AM
Ann K6OIO, Net Control

Club Dues for 2017:
Regular/New Members* - - - - - - $30
Family renewal/Join**- - - - - - - - $45
New Member Join Apr-Jun***- - -$23
Replacement Badge**** - - - - - - $ 3

* New members Jan-March, w/badge.
** Two members or more, w/badge.
*** New members April-June, w/badge.
**** There is a $1.50 charge if you'd like to have your badge mailed to you.

"RF"

ORANGE COUNTY AMATEUR RADIO CLUB

JULY 2017

FIELD DAY SUMMARY
FOR
THE ORANGE COUNTY AMATEUR RADIO CLUB - W6ZE - - page 1 of 2

by: Ken / W6HHC & Bob / AF6C

NOTE: Adjustments have not been made for duplicate contacts,and bonus points. Final scores appear in QST.

YEAR	160M SSB	80M CW	75M SSB	40M CW	40M SSB	20M CW	20M SSB	15M CW	15M SSB	12M SSB	10M CW	10M SSB	6M CW	6M PHN	2M CW	2M PHN	220 PHN	440 PHN	UHF CW	UHF PHN	ATV	RTTY/PSK Dig	SAT-ELLITE	GOTA	- - - - TOTAL - - - - QSO's	/	(POINTS)
2017	**0**	**0**	**0**	**449**	**852**	**262**	**787**	**0**	**0**	**0**	**0**	**0**	**0**	**25**	**0**	**51**	**0**	**12**	**0**	**0**	**0**	**91**	**4**	**50**	**2,583**	**/**	**6,770**
2016	0	29	18	163	342	206	760	15	18	0	0	0	1	36	0	44	0	1	0	0	0	188	1	52	1,874	/	4,952
2015	0	53	121	115	507	661	1161	190	324	0	1	71	3	60	0	45	0	6	0	0	0	77	0	1	3,396	/	8,992
2014	0	111	122	756	723	1059	1113	559	382	0	57	134	25	133	0	43	0	11	0	0	0	121	23	47	5,419	/	16,214
2013	0	269	339	655	1052	895	1960	484	614	0	38	67	6	60	0	60	15	11	0	0	0	144	4	186	6,859	/	18,700
2012	0	14	51	125	78	215	735	185	330	0	0	12	1	50	0	37	5	5	0	0	0	13	0	408	2,264	/	5,634
2011	0	58	176	168	217	253	703	32	198	0	16	40	0	57	0	37	0	16	0	0	0	0	0	139	2,110	/	5,278
2010	0	0	0	240	342	223	727	49	0	0	0	0	1	96	0	32	1	7	0	0	0	0	0	160	1,878	/	4,786
2009	0	277	126	838	807	974	970	495	368	0	5	450	11	375	0	125	18	20	1	0	0	0	2	130	5,992	/	17,446
2008	0	179	204	690	405	411	878	141	43	0	22	68	15	135	0	34	2	14	0	3	0	0	5	16	3,265	/	9,468
2007	1	356	310	910	830	988	1285	381	320	0	18	150	9	145	2	175	40	70	2	9	0	2	11	142	6,156	/	17,648
2006	0	28	20	89	512	156	664	16	10	0	0	0	0	38	1	85	0	7	0	0	0	114	0	113	1,853	/	4,514
2005	0	113	6	158	481	337	534	122	17	0	0	0	0	74	0	36	16	20	0	0	0	0	0	31	1,945	/	5,350
2004	0	166	239	37	412	131	477	31	105	0	1	114	0	0	0	46	12	20			0	0	1	0	1,792	/	4,316
2003	0	0	85	52	127	27	295	0	191	0	0	41	0	52	0	64	1	13			0	0	0	0	948	/	2,054
2002	0	26	69	192	279	76	229	0	485	0	0	18	0	62	0	68	6	10			3	2	0	3	1,528	/	3,648
2001	0	0	25	101	251	0	432	0	675	0	0	109	0	48	0	28	1	0			0	0	3	-	1,673	/	3,548
2000	0	19	20	88	91	0	625	0	794	0	0	121	0	36	0	72	7	15			0	0	1	-	1,889	/	3,992
1999	0	13	20	15	237	0	996	0	724	0	0	22		5	0	2	0	0			0	0	0	-	2,034	/	4,124
1998	0	24	75	65	136	100	250	0	624	0	0	82		0	0	46	17	12			0	7	1	-	1,439	/	3,270
1997	5	81	131	83	306	150	853	14	275	0	0	106		32	0	79	4	0			0	32	1	-	2,152	/	5,024
1996	-	146	228	104	125	283	673	40	605	0	0	217		121	0	32	0	40			0	13	1	-	2,628	/	6,428
1995	-	145	272	203	94	443	572	51	451	0	0	131		66	0	93	29	8			0	33	6	-	2,597	/	6,944
1994	-	114	114	208	45	486	748	85	761	0	13	312		58	0	94	33	0			0	31	0	-	3,102	/	8,078
1993	-	150	100	159	81	530	700	131	812	0	0	179		40	0	86	12	16			0	35	0	-	3,061	/	8,132
1992	-	0	294	200	110	541	555	0	840	0	0	232		13	0	74	0	1			2	41	80	-	2,983	/	7,530
1991	-	105	308	182	182	400	623	9	463	0	0	104		4	0	141	23	11			0	48	0	-	2,626	/	6,740
1990	-	0	0	70	144	0	370	0	747	0	0	131		39	0	114	14	26			0	2	-	-	1,657	/	3,454
1989	-	30	0	98	5	0	906	21	172	0	0	238		3	0	121	24	9			1	18	-	-	1,646	/	3,590
1988	-	127	0	93	75	2	359	0	570	0	144	81		0	0	32	0	-			-	14	-	-	1,497	/	3,726
1987	-	22	0	0	39	0	708	0	18	1	117	0		1	0	51	0	-			-	5	-	-	962	/	2,202
1986	-	0	46	219	78	0	488	0	45	10	0	0		0	0	82	0	-			-	0	-	-	968	/	2,374
1985	-	85	0	315	91	35	662	78	0	-	0	0		0	0	22	0	-			-	-	-	-	1,288	/	3,602
1984	-	18	0	313	0	32	196	32	350	-	0	0		0	0	0	0	-			-	-	-	-	941	/	2,672
1983	-	3	93	200	0	0	776	0	995	-	0	43		18	0	16	1	-			-	-	-	-	2,145	/	4,696
1982	-	0	105	59	238	40	352	19	515	-	0	72		0	0	155	27	-			-	-	-	-	1,582	/	3,400
1981	-	0	167	200	265	60	699	77	717	-	0	105		0	0	197	0	-			-	-	-	-	2,487	/	5,648
1980	-	20	149	205	235	471	318	52	1,025	-	0	226		12	0	100	36	-			-	-	-	-	2,849	/	7,194

"RF"

ORANGE COUNTY AMATEUR RADIO CLUB

JULY 2017

FIELD DAY SUMMARY
FOR
THE ORANGE COUNTY AMATEUR RADIO CLUB - W6ZE - - page 2 of 2

by: Ken / W6HHC & Bob / AF6C

NOTE: Adjustments have not been made for duplicate contacts,and bonus points. Final scores appear in QST.

YEAR	160M SSB	80M CW	75M SSB	40M CW	40M SSB	20M CW	20M SSB	15M CW	15M SSB	12M SSB	10M CW	10M SSB	6M CW	6M PHN	2M CW	2M PHN	220 PHN	440 PHN	UHF CW	UHF PHN	ATV	RTTY/PSK Dig	SAT-ELLITE	GOTA	- - - - TOTAL - - - - QSO's	/	(POINTS)
1979	-	0	195	198	92	42	773	0	737	-	0	95		0	2	124	8	-			-	-	-	-	2,266	/	5,016
1978	-	16	196	246	170	30	981	57	558	-	13	145		0	1	164	23	-			-	-	-	-	2,600	/	5,926
1977	-	25	243	182	199	0	843	81	486	-	4	309		0	4	234	0	-			-	-	-	-	2,610	/	5,812
1976	-	99	254	152	487	21	600	64	210	-	2	54		0	0	2	0	-			-	-	-	-	1,945	/	4,566
1975	-	80	120	154	274	40	863	140	259	-	0	123		0	0	0	0	-			-	-	-	-	2,053	/	4,934
1974	-	6	161	6	333	0	630	12	342	-	0	110		0	0	0	0	-			-	-	-	-	1,600	/	3,248
1973	-	90	226	0	452	0	932	0	273	-	0	0		0	0	46	0	-			-	-	-	-	2,019	/	4,218
1972	-	0	50	0	350	0	521	0	530	-	0	0		0	0	94	0	-			-	-	-	-	1,545	/	3,090
1971	-	0	274	0	106	0	530	0	136	-	0	0		0	0	0	0	-			-	-	-	-	1,046	/	2,092
1970	-	0	272	0	0	0	531	0	426	-	0	0		0	0	0	0	-			-	-	-	-	1,229	/	2,458
1969	-	0	98	0	50	0	375	0	301	-	0	0		0	0	169	0	-			-	-	-	-	993	/	1,986
1968	-	10	224	62	396	93	328	24	430	-	0	68		0	0	145	0	-			-	-	-	-	1,780	/	3,938

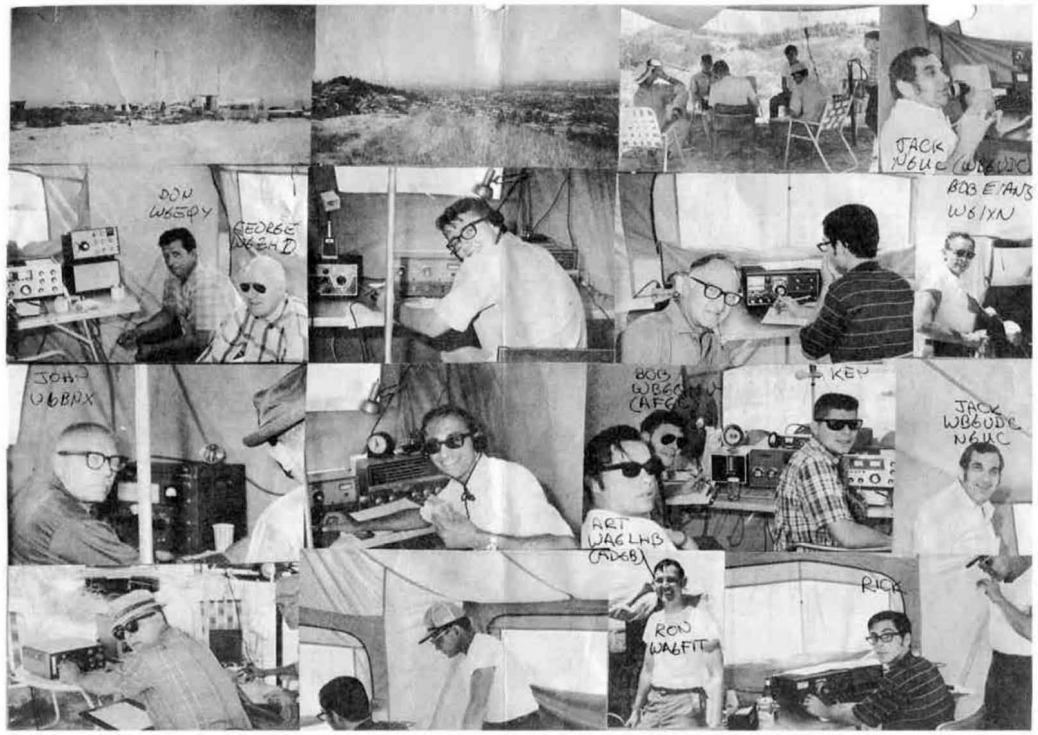

ORANGE COUNTY AMATEUR RADIO FIELD DAY

JUNE 27 AND 28 1970

via SIGNAL REPORT

... what I like most about Field day is roughing it.

Image above from the 1969-05-06 RF Newsletter

OCARC – ARRL FIELD DAY 2017 (FD17) SNAPSHOTS

ABOVE: Field Day 2017 Collage by Bob AF6C

'Radiant RF' @ FD17 by Tom W6ETC

Quotes from Field Day 2017

"Good food, good friends, good radio, and skilled determined operators even with bad propagation still adds up to a great time!"
Tony N2VAJ

"Aloha, from Hawaii!"
Greg W6ATB

"Lots of great visitors, plenty of QSO's and tasty BBQ chicken."
Tim N6TMT

"Had a fun time working with Ron. We erected his three element 40 meter inverted V beam as per his calculated footprint plan and lo and behold it was 50 ohms at 1.2:1. This man turned theory into practice and we had fun doing it, and the figures for the performance of the antenna was the reward. Superb. "
Rodger AI6WV

"Ron,W6FPS is a one man antenna factory and a lot of fun to work with."
Jim AF6N

"For those of us who knew Kei Yamachika W6NGO, it was touching to hear his old callsign in use at the GOTA station. We had great friends, food and fun at our Field Day. Our 20 and 40 meter strategy worked well to get achieve a great score. Thanks again to everyone who participated."
Tim N6GP

"The temperatures at Field were great…until Sunday tear-down.

Band conditions on 20M and 40M were better than expected.

Congratulations to 40M SSB team for achieving top score – 860 QSO's"
Ken W6HHC

"I couldn't be at field day this year, but all these quotes make me want to be there next year!"
Chris - N6CTB

FD17 Has Left the Room

by Tom Cowart W6ETC

FD17 has come and gone. I've recently been asked "what is FD17?" According to ARRL's (American Radio Relay League) describes FD17 (aka Field Day 2017) as the "**Ham Radio's Open House**" where "Ham's **showcase their science, skills and services**. Ham radio is making, creating, communicating and fun!" Field Day has also been described as a "picnic, a campout, (an opportunity to) practice for emergencies, an informal contest and, most importantly… **FUN**! Checkout the many comments from OCARC members and other included in this newsletter!

To the Amateur Radio operator (aka Ham Operator) FD17 is perhaps **the single most exciting on-the-air event for the year**. Simply put Field Day is a big gettogether for Hams! It's competitive, demanding at times, exciting for sure, a time to rub elbows with and learn from some of the best and a time to explore new possibilities in analog (and digital) communications.

Field Day Dates: This year FD17 started on Saturday June 24th (1800 UTC) ending 24 hours later on Sunday June 25th (2059 UTC). Future Field Day's will typically be scheduled on the fourth weekend of June. According to the ARRL 'Field Day' draws more than **35,000** radio amateur operators during the 24-hour period.

Why do so many amateur radio operators participate in Field Day? That's a great question!
Advanced operators often enjoy the fast-paced informal contest … a structured contest that challenges the operators to connect with as many other amateur radio operators during the 24-hour period.

Field Day encourages the development of new friendships by providing an opportune time to work alongside and connect with others both in the field, on-the-air, locally and nationally. Amateur radio OP's come to Field Day because they share common interests! Interest may include but not limited to… radio communications, electronics, emergency communications and response, and new and exciting technologies (digital, satellite, etc.) to name a few! Bottom line is Field Day is FUN! See the attached snapshots that offer a glimpse into the challenges, enjoyment and excitement of FD17!

OCARC – ARRL FIELD DAY 2017 (FD17) SNAPSHOTS

FD17 Poem

On Field day, we all compose
our CQ! CQ! for our QSO's
By CW, digital and various meters
eschewing all those repeaters
Log the call, then on with the spree,
barely time for a seventy-three. "
- by Vijay KM6IZO (OCARC Poet Laureate)

Volunteers setting up antennas for FD17

Left to Right: James AF6N; Paul W6GMU

OCARC – ARRL FIELD DAY 2017 SNAPSHOTS CONTINUED

Left to Right: Don K0VNJ; Tim N6GP; Lito WI6Y; Tony N2VAJ; Robbie KB6CJZ

FD Comments

"I would like to thank the Boy Scouts for cooking the wonderful meal during Field Day and it was a pleasure working with many of the young scouts on the 2 and 6 meter radio until midnight to get credit for their badges. It was also a pleasure working with and getting to know many of the OCARC members. You can always tell a dedicated ham by the time they are willing to put in on Field Day."

-- Don K0VNJ

OCARC – ARRL FIELD DAY 2017 SNAPSHOTS CONTINUED

Above: (Left & Center) Solar panel + battery (www.BioennoPower.com); (Right) Corey KE6YHX at the helm of the Digital Station.

FD17 Comments

After all the planning, organizing, and hauling, it was joyous to see those first two contacts come in. It was then I knew Vijay and I could make the next 94. I thank all those who offered, provided, and helped to make the digital station possible. It is a testament to your caring, commitment, and ingenuity. Together, we made it happen!

Corey KE6YHX

FD17 COMMENTS

Here is the real example of the true spirit of Field Day. Sleeping in the trunk of your car must be really uncomfortable. It's one of the best indications of the dedication of the HAM radio operators. They are willing to sacrifice the comfort of their lives to help others.

Nicholas AF6CF

OCARC - ARRL FIELD DAY 2017 SNAPSHOTS CONTINUED

Bob AF6C (Lower Left) & Ken W6HHC (Upper Right) on 20M Phone

'FD BURGER BOSS' by Tom W6ETC

'Field Day Fellowship 17' by Tom W6ETC

Buena Park Mayor Elizabeth "Beth" Swift visits with Nicholas AF6CF & Tim N6GP

Paul W6GMU 20M CW

Diary of a Field Day Madman!

Late June:	(Last Year):	Exhausted! It was so hot. I'll never do Field day again.
Dec 25:	(Last Year):	Six-months till Field Day; I may not participate this year! Too hot.
March 15:	(This Year):	It wasn't that hot. Maybe I should go and support the club at FD.
May 22:	One month till Field Day. I remember all the fun I had last year! Cool!	
Mid June:	Can't wait till Field Day; gonna have fun with all my ham friends. Really cool!	
FD Friday:	Morning:	Car is loaded, ready to go, eager as ever. Air-conditioning works.
	Mid Day:	Getting warm, why does setup take so long?
	Sunset:	It's been really warm. What isn't done can wait till the morning.
FD Saturday:	Morning:	Wow, we're all set up, and my coffee's still warm.
	11:00 AM:	"CQ Field Day, CQ Field Day, W6ZE 5A Orange."
	12 Noon:	Wow, way over 100 contacts in the first hour on 20 M. FUN!
	12:45 PM:	Need relief! Hungry, Boy Scout food tent here I come! GOOD FOOD!
	1:15 PM:	Back to the 20 M tent and out of the sun. Did I say it's very warm?
	3:00 PM:	Taking a break from operating. It'd be very hot but for the breeze.
	7:00 PM:	Car air-conditioning working well. Heading home for a shower.
FD Sunday:	6:30 AM:	Back again. Night team did well on 20 M. Back in the 20 M tent.
	6:35 AM:	Made ten contacts, all duplicates. Sun is hot, even this early.
	6:45 AM:	Is there anyone we haven't worked already? Where's the breeze?
	10:00 AM:	Still making contacts but hard to find new ones.
	11:00 AM:	W6ZE 5A ORG is QRT. Oh no, now we have to tear down.
	11.05 AM:	It's hotter than last year (true every year). Did I mention no breeze?
	11:25 AM:	20 minutes for a group picture? Surprised the camera didn't melt.
	11:30 AM:	Tear down, The heat in Hades has nothing on Field Day in ORG!
	1:00 PM:	Most of the work is done. So am I. Hot! Where's the breeze?
	2:00 PM:	Loaded up and on my way home. Car air-conditioning - Ahh!
Late June	(This Year):	Exhausted! It was so hot. I'll never do Field day again.

de AF6C- how about (**A**ppreciate a **F**ield-day at **6°C**)

View of the snow-capped mountains from Prado Regional Park.

Preliminary WINTER Field Day Looking Good for W6ZE

by Tim N6GP

Winter Field Day was a huge success this year for the organizers, as over 500 logs have been submitted. Unfortunately, the formatting of many of the logs have had issues, and it is slowing the processing. About 2 weeks ago, the Winter Field Day website has started posting preliminary results as they process the logs.

So far, they have posted results from 280 logs, and things are looking promising for us (W6ZE). As things stand now, we are 7th out of 96 logs in the Outdoor class. What really helped our score was that we operated on many bands and modes, which increased our multiplier.

We anticipate that final WFD results will be available for the August RF. It is expected that Winter Field Day will be even more popular next year. Keep your calendars open for the weekend of January 27-28th 2018.

For more information about the Winter Field Day website results to to: https://www.winterfieldday.com/results/

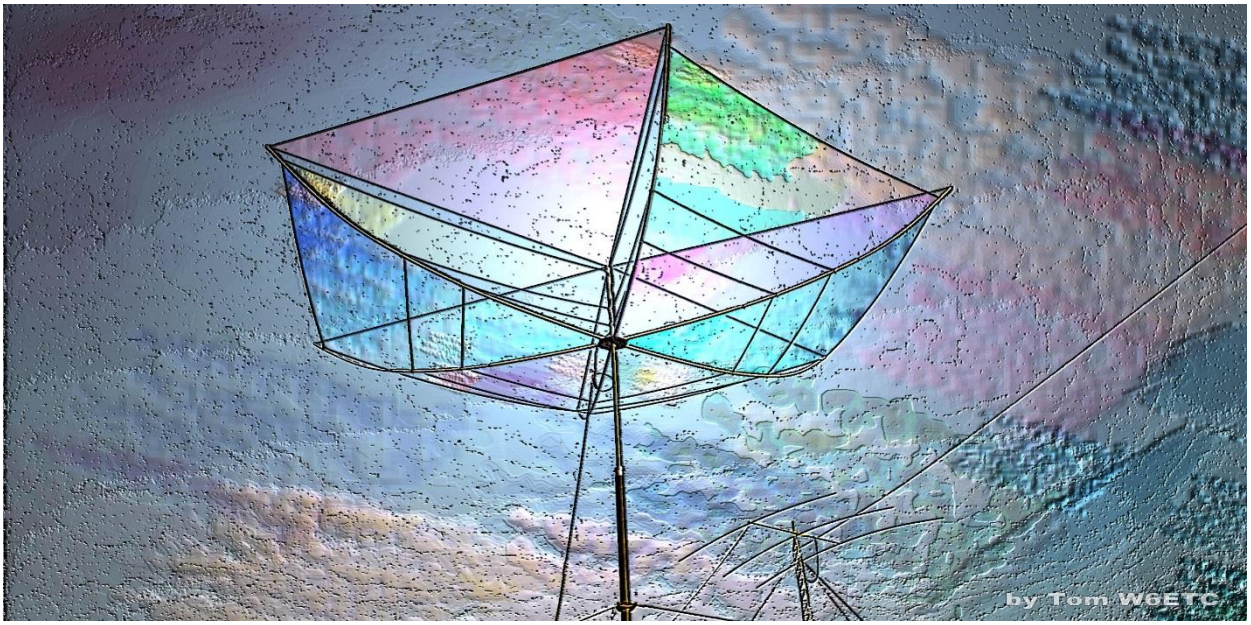

Amateur Radio operator Tom W6ETC representing the Orange County Amateur Radio Club as the lead vehicle for the annual Tustin Meadows community parade!

Chip Margelli K7JA at the OCARC June General Meeting is demonstrating the Right Way to Roll Up Coax

Heathkit of the Month #76:
by Bob Eckweiler, AF6C

ELECTRONIC TEST EQUIPMENT

Heathkit IT-121
FET/TRANSISTOR TESTER (Part II)

Introduction:
Last month we looked at the family of Heathkit transistor testers sold over a 28 year period from 1961 through 1989. Our focus fell on the IT-121 model and its restyled replacement, the IT-3120 (Figure 1). We will continue our focus on these two models, which are identical except for paint, knobs and other parts superfluous to the tester's function.

IT-121 Assembly:
Assembly of the IT-121 is quite straightforward. In the 1973 Christmas catalog assembly is considered a "two-evening project" (Figure 2). A circuit board holds all of the leaded components except for one disc capacitor, and a resistor that is used for calibration. The heart of the kit is three multiple pushbutton switch assemblies named **RANGE**, **FUNCTION** and **MODE**. These switches have, for each contact, pins for insertion into a circuit board on the bottom, and small lugs for soldering a wire to on the top. The FUNCTION and MODE switches mount to the circuit board as does a trim pot; the single adjustment required for calibration.

Circuit Board:
Circuit board assembly consists of installing six jumpers on the single-sided board, then installing one diode, one capacitor, the trim pot, and eleven resistors. Next, eight color-coded wires are prepared and one end of each is connected to the board, with their other ends to be connected later. Finally the FUNCTION and MODE switch assemblies are soldered to the board and the board assembly is set aside momentarily.

Figure 1: Restyled Heathkit IT-3120 FET / Transistor Tester

Subpanel:
A subpanel holds the front panel controls, the RANGE switch assembly and the circuit board. It is assembled and wired next.

No wiring harness is supplied with this kit. Instead five wire clamps are included. These clamps mount on the subpanel and the interconnecting wires are routed through them to keep everything neat and in order.

Once the clamps are carefully installed, the circuit board assembly is mounted to the subpanel using the holes in the switch flanges and #2 hardware. Then the RANGE switch assembly is mounted to the subpanel, followed by the two front panel potentiometer controls (**SET BETA/Gm=0** and **BETA CAL**).

Over the next four assembly pages thirty-eight lengths of wire are prepared and used to wire between the assemblies mounted on the subpanel. Heathkit provided eighteen different varieties of wire to assemble the kit. Four lengths

[1] **Notes from last month are repeated on page 22**

Figure 2: Heathkit IT-121 from the 1973 Christmas Catalog #800/78

of stranded wire of different colors and fourteen lengths of solid wire of different colors.

Front Panel:
The front panel is really the main chassis for the kit. It has four outside surfaces, a vertical surface that holds the handle, the sloping "front" panel, a top panel that holds the two transistor sockets and four banana jacks for the test leads, and the "rear" panel where the internal battery holders mount.

The two transistor sockets need to be assembled prior to installation. The socket pins come separate from the plastic socket shell, and the pins are inserted and locked in place with a twist (See figure 3). You end up with one 5-pin and one 4-pin socket. In later years Heathkit seemed to often supply components that normally come assembled in pieces, like these sockets.

The transistor sockets, the four banana jacks, the handle and two D-cell battery holders are then mount to the front panel, and the mounted parts are partially wired.

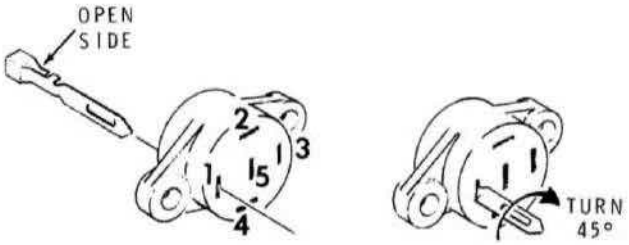

Figure 3: Transistor/FET Socket Ass'y

Next the meter is mounted using just one of the four meter mounting studs. The subpanel is then mounted to the front panel. The mounting hardware for the two front panel controls are removed and the subpanel assembly is mated to the front panel and held in place with the hardware for the two controls and the three remaining meter studs using spacers. The final wiring to mate the two assemblies is then completed.

Final Assembly:
The four lengths of stranded wire are used to make the four color-coded test leads, the knob inserts are installed in the knobs prior to installing on the controls; 2 "D" cell batteries

(user supplied) are installed and finally the builder is instructed to fasten the Blue and White Label with model and series number to the inside panel. A memorable moment for the serial Heathkit builder!

IT-121 Circuit Description:

If you look at the overall schematic[12] of the IT-121 (available online - see notes at end) you will see it is made up mostly of switches. The switching is complex yet mundane, using seven DPDT switches, five 4PDT switches and three 6PDT switches plus a SPST switch on the BETA CAL potentiometer. Thus we'll use abbreviated functioning schematics for each operation.

The IT-121 can be broken down into three major sections: The meter section, the bipolar transistor measurement section and the FET measurement section. Each section may be broken down further.

Meter Section:

The IT-121 uses a large 100µA meter with an approximate internal resistance of 1,100 ohms. A diode is located across the meter to protect the meter from excessive voltage. A 750Ω trim pot is wired in series with the meter. During calibration this trimmer is adjusted so that the total meter and trimmer series resistance is accurately 1,500 ohms, effectively making the meter a 100µA 1,500 Ω precision meter.

When testing a transistor the meter is placed in the collector circuit or the base circuit depending upon the function switch selected. To prevent upsetting the circuit when the meter is switched, it is swapped with a precision 1,500 ohm resistor.

RANGE SW	R Shunt Collector Ckt	R Shunt Base Ckt
100 µA	(open)	(n/a)
1 mA	166 Ω	open
10 mA	15 Ω	166 Ω
100 mA	1.5 Ω	15 Ω
1 A	0.15 Ω	1.5 Ω

TABLE I: METER SHUNT RESISTORS

The RANGE switch places a shunt across the 1,500 ohm meter resistance (Table I) allowing the meter full-scale reading to be changed.

Notice that when in the collector circuit the meter responds full-scale to the current given in the lefthand column, and when in the base circuit the meter is ten-times more sensitive than the current given in the left hand current. As an example, when the range switch is set to 10 mA the meter will read full-scale at 10 mA when in the collector circuit and 1 mA when in the grid circuit.

The tester operates in both polarities so it can test NPN and PNP transistors and N-Channel and P-Channel FETs. A switch is provided that reverses polarity of the batteries and the meter depending upon polarity being measured. Our discussion will only cover positive polarity.

The meter is also used to test the two 1.5 volt batteries. Figure 4 shows the simplified circuit, which is straight forward. The meter, with its protection diode and calibration pot, has a total resistance of 1,500 ohms. The diode doesn't conduct so it is effectively open. The series 10KΩ resistor causes the meter to read full-scale with a battery voltage of 1.15 volts. Meanwhile the precision 1.5 Ω 2 watt resistor shunting the battery places a load of around 1 am-

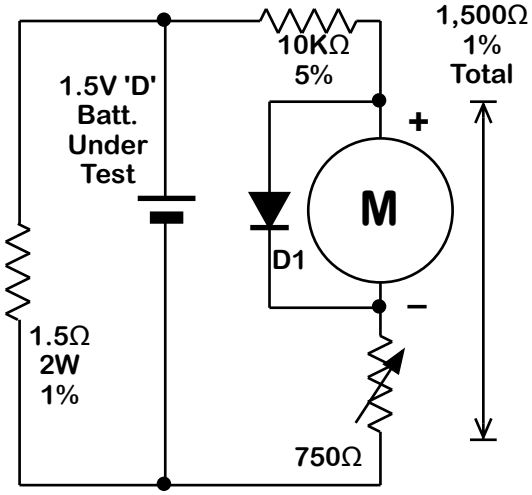

Figure 4: Battery Test Circuit

pere on a fresh battery. The low end of the **BAT. OK** scale on the meter corresponds with 82 µA so a battery that measures 0.94 volts under load will be right at the good - bad mark. The battery test draws heavy current and will drain the batteries if used excessively.

Bipolar Transistor Measurement:
The transistor collector load must be compensated for prior to measuring a transistor for beta. This is not a problem with the transistor out of the circuit, but incidental resistance in the collector circuit will affect the reading. To correct this the "Beta Equals Infinity" (**ß = ∞**) calibration is made. This circuit is shown in Figure 5. It is a simple bridge circuit that allows one to adjust R11 to the resistance of R8 in parallel with the external unknown Rx. When the current from B2, flowing through the meter (with shunt Rsh) and R8 in parallel with Rx is equal to the current flowing from B1, through the meter (in the reverse direction) and through R11, the meter reads zero (ß=∞ on the meter), and R11 is equal to the resistance of R8 in parallel with Rx. This is true with the meter switch in any of the range positions that you select for the transistor under test (discussed in Part I).

After ß=∞ is set, the beta calibration is set. Bias current is added to the base of the transistor, - the device under test (DUT), (Figure 6). The current is supplied from B2 through R10, a precision 1,500 ohm resistor in parallel with the selected base shunt resistor (See table I) and the 250KΩ **Beta Cal** potentiometer control. The current through the base of the transistor causes current to flow between the collector and the emitter. The Beta Cal potentiometer sets the collector current read on the meter. It may be set under one of three marks on the Beta scale - either X10 (at 10% of full scale,) X5 at 50% of full scale) or X1 (at 100% of meter scale).

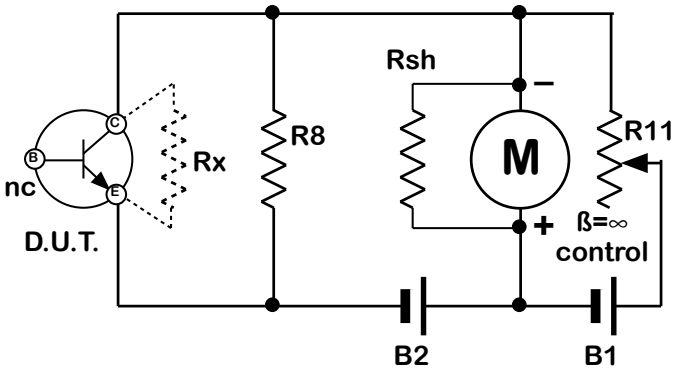

Figure 5: ß = ∞ Circuit

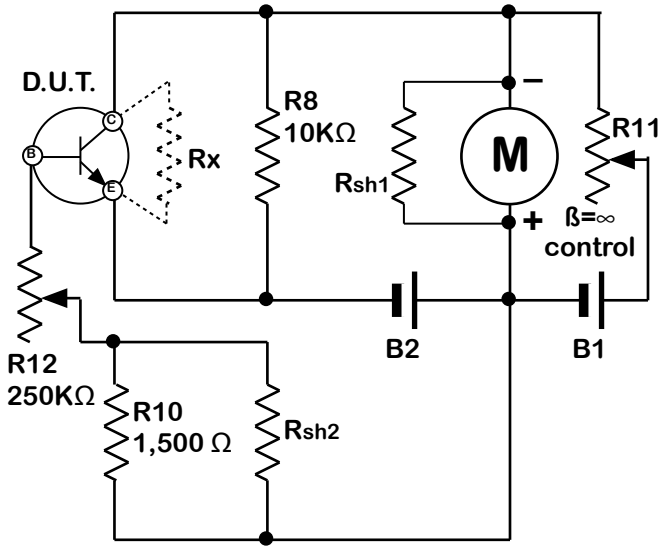

Figure 6: Beta Cal. Circuit

To measure Beta, the FUNCTION switch is then placed in the BETA position. In this position the 1,500 Ω precision resistor and the meter with 1,500 ohms resistance are swapped (Figure 7). Since the resistances haven't changed there is no change in the circuit, and

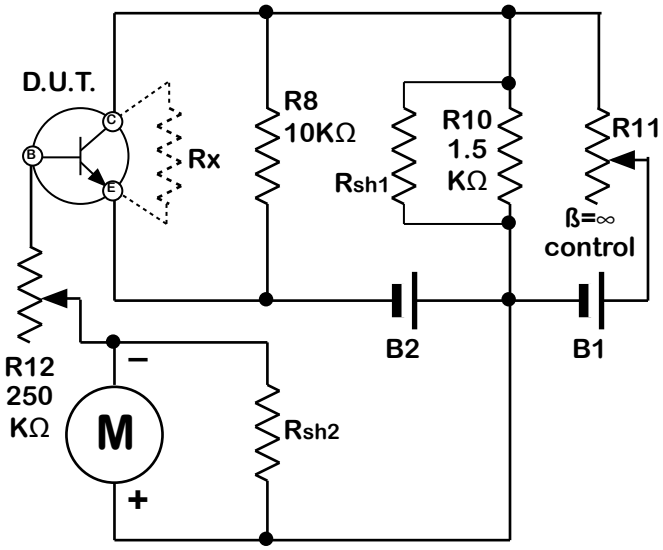

Figure 7: Beta Measurement Circuit

the collector current remains as set. With the meter now in the base circuit, the meter shunt has changed from Rsh1 to Rsh2 making the meter 10 times more sensitive and the meter now reads the transistor's Beta on the Beta scale. The reading must be multiplied by the Beta Cal setting selected by the meter marking used in the previous step.

What is happening is that when you calibrate you adjust R12 - BETA CAL. which causes the transistor to draw collector current. Say the RANGE switch is in the 10 mA position. As you adjust the BETA CAL. pot the meter will move. If you stop at the **CAL X1** mark the collector current is 1 mA, if you stop at **CAL X5** the collector current is 5 mA and if you stop at **CAL X10** the collector current is 10 mA.

Once calibrated, the BETA switch is pressed. This moves the meter into the base circuit and increases its sensitivity by a factor of ten. Beta is read on the meter scale. Let's say the meter reads a beta of 5. This corresponds to a base current of 200 µA with the range switch set to 10 mA. Depending upon which **CAL** mark you used, this represents a beta of 5, 25 or 50. If you used the **CAL X10** mark the collector current is 10 mA and the base current is 0.2 mA and:

$$\beta_{DC} = \frac{I_c}{I_b} = \frac{10}{0.2} = 50$$

Transistor Leakage Measurements:

It should be obvious that leakage measurements must be done out-of-circuit, as any circuit resistance would otherwise be taken as leakage. The IT-121 measures the three common transistor leakage parameters, Icbo, Ices and Iceo, As discussed last month, Icbo is the leakage current between the collector and base with the emitter open, Ices is the leakage current between the collector and emitter with the base connected to the emitter, and Iceo is the leakage current between the collector and the emitter with the base open. The circuits for measuring these three parameters are shown in Figure 8. Rsh is the meter shunt set by the Range switch. The leakage current is read on the 0 - 100 leakage scale with the range switch setting the full-scale value. These measurements are generally very small for silicon transistors, but can be significant for germanium transistors. Values for germanium devices that seem excessive should be checked with the device's data sheet. The leakage will also change with temperature.

Field Effect Transistor (FET) Measurement:

The IT-121, unlike the previous Transistor Testers, can also test FETs. It performs a test to measure the transconductance Gm0. This is the value of the transconductance with the gate and source at the same potential. Transconductance is the reciprocal of resistance (1/R) and is

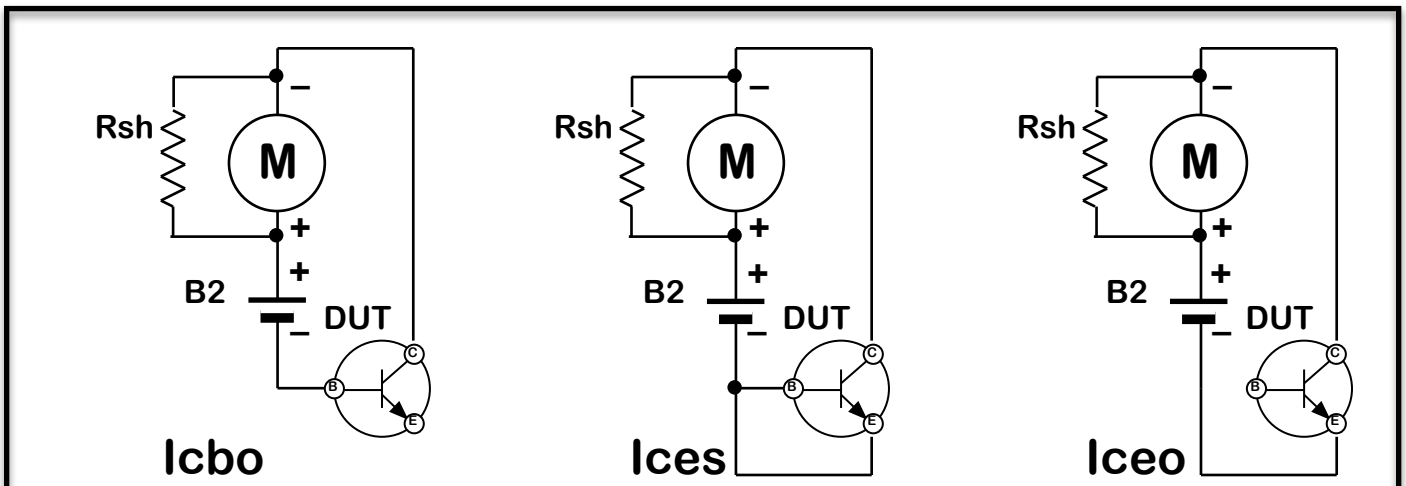

Figure 8: Simplified Circuits for Measuring Icbo, Ices and Iceo

measured in µmhos (µ℧). In more modern terms the µmho has been changed to the micro-siemens (µS). Since transconductance is related to resistance, it can be measured by a ohmmeter-like circuit. If you've ever used a VTVM you remember setting the meter to full-scale with the leads open prior to making your measurement. The **Gm=0** FET FUNCTION does exactly that. With the **SET Gm=0** control, the meter is set to full-scale. This basic circuit is shown in figure 9.

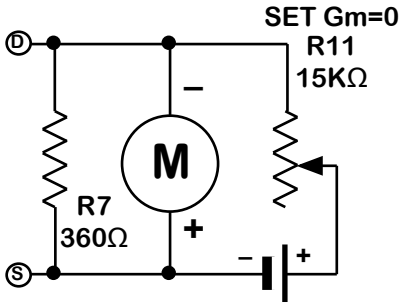

Fig. 9: SET Gm=0 Circuit

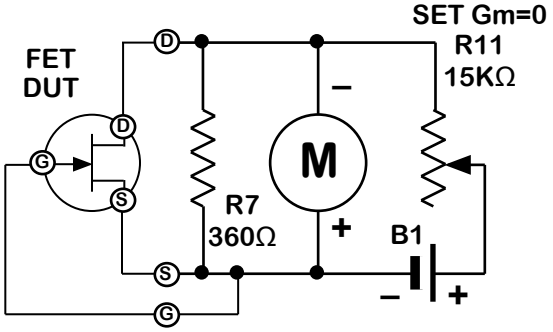

Figure 10: Gm0 Measurement Circuit

Once set, the FUNCTION is changed to **Gm** which connects the FET as shown in figure 10 with the gate and source shorted. The lower the effective resistance of the drain to source channel, the lower the meter reads, indicating a higher transconductance.

GATE 1 and GATE 2 TESTING:
To be sure the FET is working properly another test is performed. It is rather a simple test. Pressing the **GATE 1 MODE** switch applies a negative voltage on the gate of the FET under test (Figure 11). This should result in a decrease in the value of Gm

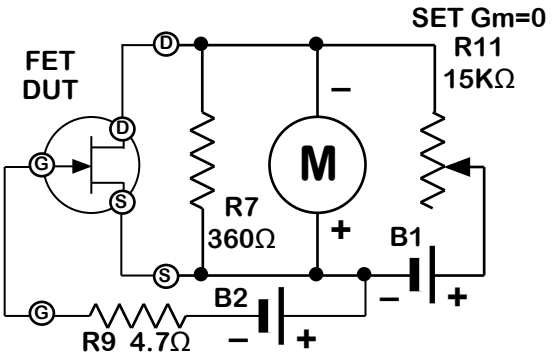

Figure 11: Gate Testing Circuit

(Meter moving towards full-scale). Some FETs have dual gates and you can test the second gate in the same manner using the **GATE 2 MODE** switch. R9 protects the IT-121 in case the FET gate is shorted.

FET Leakage Test - Igss:
Igss checks the leakage between the gate and the drain - source channel when the junction is reverse biased. The circuit is shown in Figure 12a. Not shown in the schematic is a small resistor for protection in case the junction is shorted. This is a real leakage test and no leakage should be noticeable. If needed, all the RANGE meter shunts function.

FET Leakage Test - Idss:
Idss is not a leakage test even though the IT-121 manual treats it as such. Idss is the current that passes from the drain to the source at

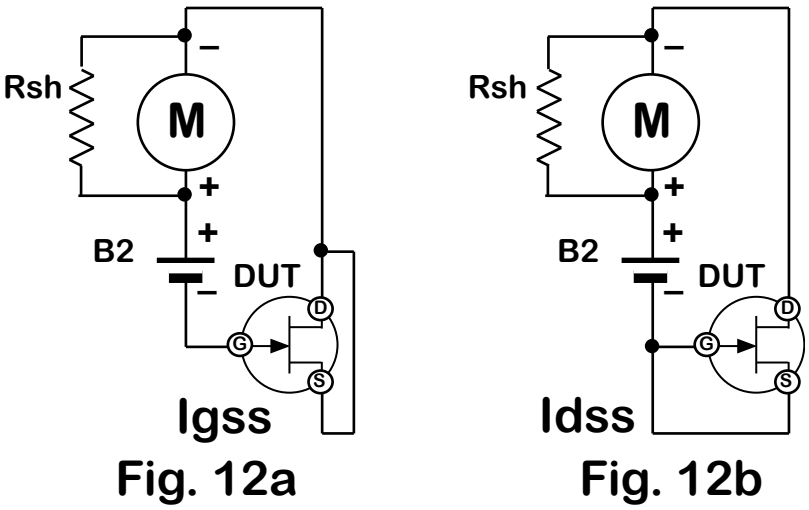

Figure 12: Igss and Idss Circuits

a given drain to source voltage with the gate connected to the source. In a JFET (Junction FET) this is the maximum current the channel can carry since it is dependent on gate voltage and the gate voltage must be zero or negative with respect to the source to keep the gate - source junction reverse biased. The circuit is shown in figure 12b. Since the current can be significant, it is best to start with the shunt set to one of the higher current ranges.

Diode Testing:

Signal and rectifier diodes are tested using the Iceo leakage circuit (Figure 8c). The diode is connected with the anode to the emitter jack and the cathode to the collector jack. Leakage current is read on the meter. To measure forward conductance set the RANGE to a measure current and press set the mode to PNP to forward bias the diode.

General Comments:

An IT-121 was obtained at a sale a few years ago. Upon opening the unit up, it was obvious that at sometime in its life the two 'D' batteries had leaked. Damage was confined to the aluminum battery holders. Replacements that fit the existing mounting holes were purchased and installed. The first thing that was noted was that those ganged pushbutton switches were dirty and acting intermittent. Use seemed to ease the problem, but after not being used for a few months the problem is right back. A way to clean the switch banks needs to be found. Also the soldering has not yet been examined closely (alas, too many projects). The IT-121 was used to mach two complementary transistors used in a project here. It did a good job and the transistors balance well in the circuit.

73, from AF6C

Remember, if you are getting rid of any old Heathkit Manuals or Catalogs, please pass them along to me for my research.

Thanks - AF6C

LAST MONTH's NOTES ARE REPUBLISHED FOR REFERENCE:

Notes:

1. **Iceo** is the current that flows between the collector and emitter with the base is open.
2. **Icbo** is the current that flows between the collector and base with the emitter is open.
3. **DC Beta** (β) is the ratio of the collector current to an applied base current. It is the DC current gain.
3. **DC Alpha** (α) is the collector current divided by the emitter current. It is always less than one and is related to the DC beta by $\alpha = \beta/(\beta+1)$.
5. **Ices** is the current that flows between the collector and emitter with the base is shorted to the emitter.
6. **Gm** (transconductance)is a measurement of how a change in FET gate voltage affects drain current. It is usually expressed in µmhos.
7. **Igss** is the FET current that flows between the gate and the source with the source shorted to the drain.
8. **Idss** is the FET current that flows between the drain and the source with the gate shorted to the source.
9. **Ieb_2s** is the leakage current between the emitter and base 2 with base 1 shorted to base 2. of a UJT.
10. **Ib_2b_1s** is the forward current through base 2 and base 1 with the emitter shorted to base 1 of a UJT.
11. **Ib_2es** is the emitter current that flows between base 2 and the emitter with base 1 shorted to the emitter of a UJT
12. A schematic of the IT-3120 (IT-121)may be found at: http://www.w6ze.org/Heathkit/Sch/IT3120_Sch.jpg

PUZZLER ANSWER!

Last Month's Puzzler asked:

There is a common abbreviation used heavily by CW operators. The abbreviation is sent with all Dits except for one Dah. Interestingly, the non-abbreviated words for the abbreviation can also be sent by CW using all Dits except for one Dah. Can you guess the abbreviation?

The answer is **'DE'** which stands for **THIS IS**. Yes, some say de stands for FROM, and it does in French. However "THIS IS" is the predominant meaning. A few responded with HR for HERE. Good answer, and at first I accepted it as an alternate solution, However, like FROM, it didn't meet the criteria of ***Interestingly, the non-abbreviated words for the abbreviation…*** Signifying that the answer is more than one word.

Winners are Fried Heyn WA6WZO (I'm sure Sandi WA6WZN helped!), and Kate Hutton K6HTN.

Runners up are: Ron Frank, and Ron Mosher with HR for HERE as a solution.

Would anyone like to submit their very own puzzler?

Send your puzzler with solution to: puzzler@w6ze.org and it will be considered for publication. Please make it a ham related theme

73 from The Puzzler

PUZZLER ANSWER!

25 YEARS AGO in RF

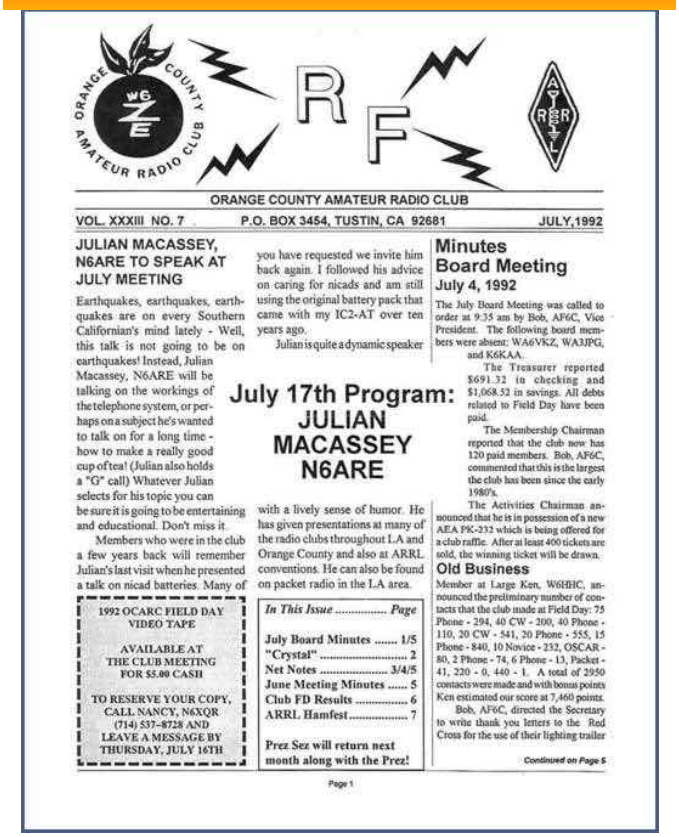

ORANGE COUNTY AMATEUR RADIO CLUB

VOL. XXXIII NO. 7 P.O. BOX 3454, TUSTIN, CA 92681 JULY,1992

JULIAN MACASSEY, N6ARE TO SPEAK AT JULY MEETING

Earthquakes, earthquakes, earthquakes are on every Southern Californian's mind lately - Well, this talk is not going to be on earthquakes! Instead, Julian Macassey, N6ARE will be talking on the workings of the telephone system, or perhaps on a subject he's wanted to talk on for a long time - how to make a really good cup of tea! (Julian also holds a "G" call) Whatever Julian selects for his topic you can be sure it is going to be entertaining and educational. Don't miss it.

Members who were in the club a few years back will remember Julian's last visit when he presented a talk on nicad batteries. Many of you have requested we invite him back again. I followed his advice on caring for nicads and am still using the original battery pack that came with my IC2-AT over ten years ago.

Julian is quite a dynamic speaker with a lively sense of humor. He has given presentations at many of the radio clubs throughout LA and Orange County and also at ARRL conventions. He can also be found on packet radio in the LA area.

July 17th Program: JULIAN MACASSEY N6ARE

1992 OCARC FIELD DAY VIDEO TAPE

AVAILABLE AT THE CLUB MEETING FOR $5.00 CASH

TO RESERVE YOUR COPY, CALL NANCY, N6XQR (714) 537-8728 AND LEAVE A MESSAGE BY THURSDAY, JULY 16TH

In This Issue ..... Page

July Board Minutes 1/5
"Crystal" 2
Net Notes 3/4/5
June Meeting Minutes 5
Club FD Results 6
ARRL Hamfest 7

Prez Sez will return next month along with the Prez!

Minutes Board Meeting July 4, 1992

The July Board Meeting was called to order at 9:35 am by Bob, AF6C, Vice President. The following board members were absent: WA6VKZ, WA3JPG, and K6KAA.

The Treasurer reported $691.32 in checking and $1,068.52 in savings. All debts related to Field Day have been paid.

The Membership Chairman reported that the club now has 120 paid members. Bob, AF6C, commented that this is the largest the club has been since the early 1980's.

The Activities Chairman announced that he is in possession of a new AEA PK-232 which is being offered for a club raffle. After at least 400 tickets are sold, the winning ticket will be drawn.

Old Business

Member at Large Ken, W6HHC, announced the preliminary number of contacts that the club made at Field Day: 75 Phone - 294, 40 CW - 200, 40 Phone - 110, 20 CW - 541, 20 Phone - 555, 15 Phone - 840, 10 Novice - 232, OSCAR - 80, 2 Phone - 74, 6 Phone - 13, Packet - 41, 220 - 0, 440 - 1. A total of 2950 contacts were made and with bonus points Ken estimated our score at 7,460 points.

Bob, AF6C, directed the Secretary to write thank you letters to the Red Cross for the use of their lighting trailer

Continued on Page 5

Page 1

In the July 1992 RF earthquakes were a big topic. The Landers M7.3 quake struck just two minutes before 5 AM on Field Day Sunday June 28th and triggered the M6.2 Big Bear quake three hours later. OCARC was operating FD at the MCAS(H) base in Tustin.

The guest speaker for the July meeting was announced as Julian Macassey - N6ARE who would speak on the telephone system (and possibly on how to make a really good cup of tea). Julian's talked at our club previously.

An article, written by Bob - AF6C, discusses the Crystal Seismometer which transmits, on VHF, a tone modulated by any seismic activity (no longer operational).

Bob Evans - WB6IXN had two plus pages covering the Net Notes for June. No comments in the notes on earthquakes as Landers didn't occur until after the last net of the month.

The yearly preliminary Field Day score sheet updated by Ken - W6HHC was published, just like it is in this RF.

Our RF Editor was Nancy-N6CQR. Early into desktop publishing she created a lot of the standards we follow in current RF issues.

The eight-page issue also covered the minutes of the June general and July board meetings, as well as a full page announcement for the ARRL Convention to be held at the LAX Marriott Hotel.

You may read the full issue in our RF archives section of http://www.w6ze.org/Newsletter/RF-Index.html

de (this is) AF6C

BOAT ANCHOR RESTORATION – W6IRD

by James Schultz AF6N

Wayne and Sharon Spring, W6IRD and K6IRD, married more than 50 yrs, make up an inspirational team. While raising five children they have continuously been active in ham radio. Theirs is a "lesson in faithful commitment to the work ahead, attention to detail, and a relationship …where ham radio has been a major ingredient in the success of each."

Wayne is known nationally as one of the best restorers of Collins Radio equipment in the ham radio community. His ham career began in 1949 and has resulted in a career including six years in the US Coast Guard and responsible positions with Northrup Aircraft, the US Defense Contract Div., and the US Navy as Support Supervisor.

Although Wayne specializes in Collins equipment he also takes on challenging repairs of all brands of ham equipment. Wayne's workshop/shack includes a full machine and sheet metal shop where he can and does fabricate chassis' and cabinets for equipment in restoration. Wayne enjoys vintage rigs and regularly operates his extensive collection of classic radios.

He has been a successful DXer (Past president of the Southern California DX Club) and loves AM operation.

Sharon currently holds an Amateur Extra Class license. She supported Wayne's hobby and career for years prior to acquiring her first license. During those years she enjoyed attending ham events and meetings with Wayne. Sharon's own career was that of a very successful and acknowledged Corporate Director of Human Resources.

Sharon acquired her first license in 2004 and immediately found her niche in hunting DX. That hunt has resulted in DXCC on several bands.

An inside family joke developed that their bedroom ham shack has become Sharon's DX station, thereby relegating Wayne to his AM station in the workshop.

Sharon is also a former president of the Southern California DX Club. Known as the First Lady of the AM International Network, Sharon is also a regular net control for the weekly AMI Network.

Sharon continues supporting Wayne's activities and actively lends a friendly hand to all and especially to wives of active hams

Top photos and quotes courtesy of:
QSO Today, Episode 12
Bottom anchor photo courtesy of:
Tom W6ETC

Last Man Standing Facebook™ video (1:42)

Here's a little Thanksgiving flashback treat for all our ham radio fans!

I hate the laugh track but admit it funny – Tom W6ETC

Or go to the following link:
https://www.facebook.com/KA0XTT/videos/1009771835747206/
Source: Ham Radio Humor http://noji.com/hamradio/humor.php

UPCOMING EVENTS

AUGUST 18, 2017 MEETING
Ham Radio Mesh networking is a rapidly developing interest. Don Hill, KE6BXT and Joe Ayers, AE6XE have reported in the past on Southern California Mesh networking. They will bring us up to date on the latest activity and growth of the broadband ham network here in Orange County.

SEPTEMBER 15, 2017 MEETING
Doug Millar, K6JEY, will speak on "Test Equipment & Measurements for Amateur Radio". Doug will bring an accurate voltage source. He asks that members bring a personal meter to the meeting and he volunteers to calibrate member's voltmeters at the meeting.

OCTOBER 20, 2017 MEETING
This will be the annual OCARC auction night with Chip Margelli, K7RA returning as auctioneer. Members are invited to empty garages and offer those treasured boat anchors for sale. Even valuable working equipment is welcomed for sale. This is your chance to buy a bargain addition for your shack.

NOVEMBER 17, 2017 MEETING
Michael Rickey, AF6FB will speak on both the PAPA repeater system and D-Star equipment and technology. Michael is very active on the PAPA repeaters using DMR, D-Star, as well as analog modes. He also hosts an amateur radio blog at http://www.af6fb.net

DECEMBER CHRISTMAS DINNER
Tentative plans are to return to Mimi's for our dinner. Date and details to be announced when firm.

JANUARY 12, 2018 MEETING
Lito de los Reyes, KI9H will make a presentation on the All Star network. Lito previously presented a very interesting show and tell on the All Star system and will expand upon its growth and advantages.

FEBRUARY 16, 2018 MEETING
To be announced.

MARCH 16, MEETING
Tim Duffy, K3LR, from DX Engineering will present via Skype. The topic will be an introduction to the amazing Multi Multi K3LR contest station.

For the most current Upcoming event information go to:
http://www.w6ze.org/Events.html

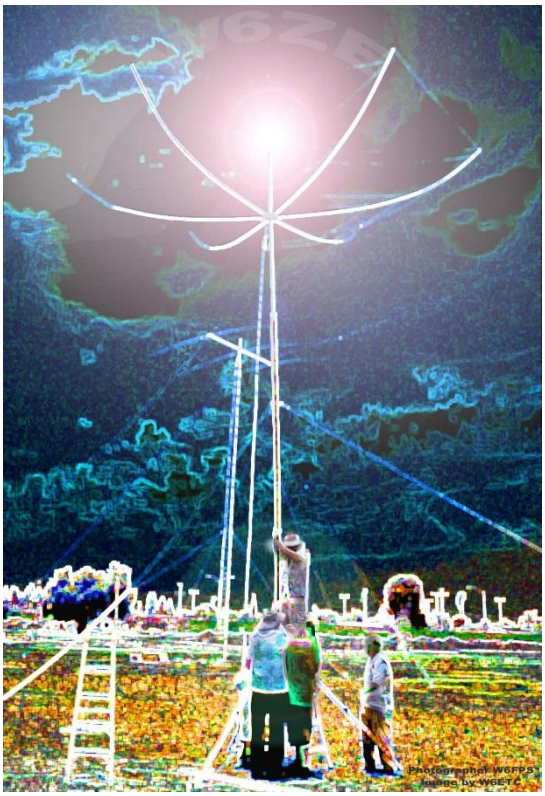

Tom W6ETC

OCARC
BOARD MEETING MINUTES
2017-07-01

The April OCARC Board meeting was held at the Marie Callender's Restaurant at 1821 N. Grand Ave in Santa Ana on July 1, 2017.

Meeting Called to Order: 8:10 am

Roll Call:

Pres.: Tim N6GP, Present
Vice Pres. Jim AF6N, Present
Sec.: Ron W6FPS, Present
Membership: Bob AF6C, Present
Tech.: Clem W0MEC, Absent
Treasurer: Ken W6HHC, Present
Activities: Tim N6TMT, Present
Publicity, Dan N6PEQ, Absent
Directors at Large: Greg W6ATB, Present
Nicholas AF6CF, Present

Members Present: Rodger AI6WV, Corey KE6YHX, Tom W6ETC, and Greg KG6PTL

DIRECTOR REPORTS:

- **Vice President** – Jim AF6N reported that the July speaker will be Wayne W6IRD giving a talk on Boat Anchor Restoration and the August speaker will Don Hill KE6BXT, Mesh Network/AREDN. Lito KI9H will be the speaker for next January and the subject will be the AllStar Link Network.
- **Secretary** – Ron W6FPS reported that there was a letter sent to the club from Cherie Ericson who is the daughter of a Silent Key, Robert Hill K6COE. She is looking for help in disposing of her late father's ham equipment. Tom W6ETC has volunteered to contact Cherie and report back to the club what equipment is involved and how we may be of help.
- **Membership** – Bob AF6C reported the current membership is now 82 members.
- **Technical** – No Report.
- **Treasurers Report** – Ken W6HHC. Ken reported that the rental fee for the club's storage locker has increased by a few dollars per month. All other treasury related items are "normal".
- **Activities** – Tim N6TMT No report.
- **Publicity** – No report.
- **Directors at Large** – Nicholas AF6CF noted that Field Day information table was non–existent and the signup list was not being circulated and he believes these and other items could have been better coordinated. Greg W6ATB was unable to attend Field Day while experiencing warm water temperatures and high gas prices in Maui.

OLD BUSINESS:

- **Newsletter Editors**
  July (This Issue) - Tom W6ETC, August - Kristin K6PEQ, September - Greg W6ATB.
- **Club Historian Report** – Corey KE6YHX provided a copy of his report on his ongoing work with Santa Ana Library. He is currently for link errors.
- **2017 Field Day** –Tim N6GP had several items to cover, guy line tying to the towers, labels need to be added to the 10 & 15 meter beams, he thought the Boy Scouts barbequed chicken was really good, training with the Boy Scouts to help increase our bonus points, switching the 40M CW station to digital Sunday morning, station tents within the fall radius of the towers, recommendation that the club buy a 100' and a 50' section of RG-8X coax. A motion as made, seconded, and passed to buy the coax sections.
  Bob AF6C is missing a can of Penetrox and Robbie KB6CIZ is missing two 25' coax sections that they brought to Field Day. The coax sections were identified by green electrical tape wound around each end. The club kilowatt battery and solar panel was used by Corey KE6YHX to power the 20 meter digital station at Field Day. Each member present was asked their impression of the 2017 Field Day effort. The overall consensus was very positive.
- **Net Control Guidelines** – Corey KE6YHX ask that the "Net Control Guidelines" and "Net Control Script" be posted on the website. Tim N6TMT will work on the addition to the website.

NEW BUSINESS:

- **Renewal of W6ZE** – Bob AF6C and Tim N6GP will get together and prepare the paperwork for the renewal of the club's license.
- **Ham Jam at HRO** – Tim N6GP will provide the banner, Jim AF6N will provide an easy-up. Tim N6TMT will provide tables and chairs.
- **VE Testing** – George Collins AI6BF will be asked to coordinate a VE Testing session one hour prior to the September General Meeting.
- **Christmas Banquet** – December 8 was selected for banquet date.

CONTINUED ON NEXT PAGE

OCARC BOARD MEETING MINUTES CONTINUED:

GOOD of the CLUB:

- **Bioenno Power** – Through Tom W6ETC & Nicholas AF6CF, we want to thank Bioenno Power for their support of OCARC activities and for their generous donation of misc., LiFePO4 batteries. The batteries will be made available for club use and may used as prizes at upcoming General Meetings.
- **Club Picnic** – Plans are being made for a club picnic to be held on the first weekend of October. The picnic date will coincide with the California QSO Party.

Meeting Adjourned 10:12 am
Submitted by *Ron Mudry W6FPS*
OCARC Secretary

OCARC
GENERAL MEETING MINUTES
2017-06-16

The OCARC General meeting was held at the Red Cross Complex in Santa Ana on June 16, 2017.

Club Officers: There was a quorum with all officers present with the exception of Dan N6PEQ.

Attendance: There were a total of twenty-seven club members, five guests, and the guest speaker Chip Margelli K7JA.

Meeting started at 7:05 pm

Program:
Jim AF6N introduced this month's speaker Chip K7JA. Chip is an honorary member of OCARC and has given his inspiring, educational and very entertaining presentation several times over the past years.

Needless to say, his talks are eye openers to what we should be doing during the months, weeks and days leading up to Field Day. As he points out **preparation** is a big part of a successful Field Day operation.

Intermission was taken from 8:05 pm to 8:30 pm

Announcements:

- Arnie N6HC announced that he has seven 16 foot fiberglass poles that are good for supporting temporary antennas for sale, being offered at $6.00 each.
- Ken W6HHC asked members to purchase in advance 'Field Day Meal Tickets' during the meeting if possible.
- The budget for Field Day, as outlined by Ken W6HHC, was voted on and passed.
- Jesse KB6MQY discussed the menus for the meals that are to be provided by the Boy Scouts.
- Steve KK6REB reported that the Fire Department will not be onsite during the week of Field Day.

Discussion:

- The schedule for transporting the club equipment from and back* to the storage locker. Steve KK6REB has volunteered his truck for the move. The loading of equipment will be at 4:30 Tuesday afternoon and Sunday immediately after Field Day.
  - *Transportation Update 7/08/17: Equipment return was delay due to volunteer scheduling and mechanical issues of transportation. The equipment used during FD17 was picked up on Saturday 07/08/2017 by Tom W6ETC. He provided a cargo trailer and was assisted by Tim N6GP, Tim N6TMT, Jim AF6N, Steve KK6REB and his son Josh. The equipment was successfully returned back to the OCARC storage locker at Placentia storage.
- Field Day setup will begin 9:00 am Friday morning.
- Doug K6PGH suggested that everyone bring gloves, suntan lotion and a hat. It will be hot.
- Bob AF6C say the generator is in good shape and it will be transported to and from the site by Tim N6TMT.

Good of the club:

- Clem W0MEC donated a handheld vacuum to the club. The vacuum will be used to clean the meeting room.

Meeting was adjourned at 9:00 pm

Submitted by *Ron Mudry W6FPS*
OCARC Secretary

OCARC Cash Flow - Year To Date

1/1/2017 through 6/26/2017

Category	1/1/2017-6/26/2017
INFLOWS	
ARRL Membership Income	95.00
Badge Income	5.00
Dues, Family	90.00
Dues, Family (PayPal)	206.03
Dues, Future (PayPal)	28.83
Dues, Membership	742.50
Dues, Membership (PayPal)	756.59
Field Day Food Income	315.00
Refreshments Income	39.00
Sale Of Equipment	870.00
TOTAL INFLOWS	**3,147.95**
OUTFLOWS	
ARRL Membership Expense	93.00
Bank Svc Chg	45.00
Field Day Food	345.00
Field Day Food Reinbursement	150.00
Field Day Rental	51.72
OCARC Historian	27.45
PO Box Rental	64.00
Refreshments Expense	105.69
Storage Locker	380.00
Supplies	46.62
Trifold Brochure Printing	231.12
Web Site Hosting	89.94
TOTAL OUTFLOWS	**1,629.54**
OVERALL TOTAL	**1,518.41**

HAMCON 2017

ARRL Southwestern Division Convention

September 15-17, 2017

Torrance Marriott Redondo Beach Hotel
3635 Fashion Way
Torrance, CA 90503

HAMCON 2017
ARRL SW DIVISION CONVENTION
RADIO FOR EVERYONE

Hamcon, Inc. is a 501(c)3 Non Profit Organization
Donations to Hamcon, Inc. are tax deductable

"Ham Radio for Everyone" is our theme with much to see and do at HAMCON 2017

- Full range of talks by experts on radio equipment, operating techniques, public service, DXing, technical subjects, and much more
- 10,300 sq. ft. Vendor/Exhibit Hall with 63 booth spaces
- Distinguished speakers at Saturday lunch and dinner, and Sunday breakfast
- Extensive prize drawings
- W1AW/6 Special Event station
- ARRL Forums, Ham License test sessions
- Young ham forum
- Sunday swap meet
- Discount hotel room rates (available through the Marriott link on our website)
- With more to come . . .

AND FOR THE FIRST TIME EVER

Special Friday Afternoon tour of the **Battleship Iowa**

- Includes Catered Buffet Dinner in the Officer's Wardroom
- Tour the Radio Room (not open to the general public) and operate the ship's NI6BB amateur station
- Bus transportation to and from the Marriott Hotel included
- Limited to 80 guests, so register early

For complete convention details, registration and hotel bookings log onto:

WWW.HAMCONINC.ORG

Annual Orange Section Amateur Radio Emergency Services Seminar & Training

August 5, 2017
9:00am – 3:00pm
Alvord Unified School District
Board Room
9 KPC Parkway
Corona, CA 92879

Amateur Radio Emergency Services, Operations Overview
Bob Turner, W6RHK
Orange Section Emergency Coordinator

California State RACES, Operations Overview
Jeff Lee, KF6NXQ
Deputy State RACES Officer, So. Calif.

San Bernardino County Emergency Communications Services
Operations Overview
Zack Mullennix, KD6KOG
San Bernardino County Fire Department
Office of Emergency Services

Other Speakers TBA

Lunch Provided.
Please RSVP to W6RHK@yahoo.com

Digital Amateur TeleVision Exciter/Transmitter

Now available from

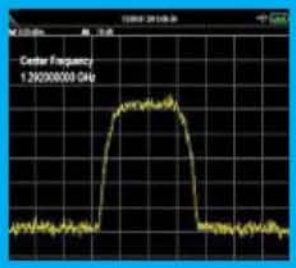

DATV-Express

- A more affordable DATV exciter can now be ordered
- Fully assembled and tested PCBA
- DVB-S protocol and DVB-S2 protocol for DATV tramsmissions
- Can operate all ham bands from 70 MHz-to-2450 MHz
- RF output level up to 10 dBm (min) all bands (DVB-S)
- Software Defined Radio (SDR) architecture allows many variations of IQ modulations
- "Software-Defined" allows new features to be added over the next few years, without changing the hardware board
- Symbol Rates from 100K to 8000K Symb/sec allows RB-DATV
- Requires PC running Windows or Ubuntu Linux (see User Guide)
- Price is US$300 + shipping – order using PayPal

For more details and ordering
www.DATV-Express.com

Register on the web site to be able to see the PURCHASE page