RF

ORANGE COUNTY AMATEUR RADIO CLUB, INC.

VOL. LII NO. 7 **P.O. BOX 3454, TUSTIN, CA 92781-3454** **July 2011**

The Prez Sez.....

By Paul W6GMU

Well, that was a truly fine and enjoyable ARRL Field Day, so proclaimed by all who attended. We not only had a great time but generated the fourth highest score in the history of OCARC! Check the FD Report and scores for all the details.

We now look forward to all the excellent Club activities scheduled for the rest of the year.
I hope you all have a wonderful Summer!! 73 de Paul W6GMU

How to send a Newsletter Article to The Editor

Do you have an article or a picture you found that you think may be of interest to the OCARC members??

Just e-mail the article to:

EDITOR@W6ZE.org

Sending in JPEG files to the editor are best for pictures. Using WORD or .TXT files are best to send the articles to the "RF" editor.

New YAHOO Group formed for ham radio Digital Amateur TV

A new Yahoo Group was formed in early June to allow hams interested in learning or sharing experiences and knowledge about Digital ATV. You can find the group at:

http://groups.yahoo.com/group/DigitalATV/

Ken W6HHC is a co-moderator of this new Yahoo Group along with Mark Thompson WB9QZB (a leader in the world-wide TAPR ham organization for digital communications). Ken reports that over 225 hams have joined this group from all over the world.

In This Issue: **Page**

The next general meeting will be held on:

Friday, July 15th @ 7:00 PM

We will be meeting in the east Red Cross Building, Room 208.

The speaker for the July 15th Meeting will be announced on the OCARC website.

ORANGE COUNTY AMATEUR RADIO CLUB
www.W6ZE.org

2011 Board of Directors:

President:
Paul Gussow, W6GMU
(714) 624-1717
W6GMU@w6ze.org

Vice President:
George Jacob, N6VNI
(562) 619-8870
N6VNI@w6ze.org

Secretary:
Doug Britton, W6FKX
(714) 969-0301
W6FKX@w6ze.org

Treasurer:
Ken Konechy, W6HHC
(714) 744-0217
W6HHC@w6ze.org

Membership:
Jeff Hall, W6UX
(714)
W6UX@w6ze.org

Activities:
Kristin Dankert, K6PEQ
(714) 544-9846
K6PEQ@w6ze.org

Publicity:
Steve Brody, N1AB
(714) 974-0338
N1AB@w6ze.org

Technical:
Bob Eckweiler, AF6C
(714) 639-5074
AF6C@w6ze.org

Directors-At-Large:

Dan Dankert, N6PEQ
(714) 544-9846
N6PEQ@w6ze.org

Larry Mallek, K6YUI
(714) 533-0887
K6YUI@w6ze.org

2011 Club Appointments:

W6ZE Club License Trustee:
Bob Eckweiler, AF6C
(714) 639-5074
AF6C@w6ze.org

Club Historian:
Bob Evans, WB6IXN
(714) 543-9111
bobev@netzero.net

RF Editor (rotating):
Paul Gussow, W6GMU
(714) 624-1717
W6GMU@w6ze.org

WEB Master:
Ken Konechy, W6HHC
(714) 744-0217
W6HHC@w6ze.org

Assistant WEB Master:
Bob Eckweiler, AF6C
(714) 639-5074
AF6C@w6ze.org

ARRL Awards Appointee:
Arnie Shatz, N6HC
(714) 573-2965
N6HC@aol.com

Larry Beilin, K6VDP
(714) 557-7217
K6VDP@aol.com

OCCARO Delegate:
Steve Brody, N1AB
(714) 974-0338
stevebrody@sbcglobal.net

Monthly Events:

General Meeting:
Third Friday of the month
at 7:00 PM
American Red Cross
601 N. Golden Circle Dr.
(Near Tustin Ave. & 4th St.)
Santa Ana, CA

Club Breakfast:
Second Saturday of every
month at 8:00 AM
Jagerhaus Restaurant
2525 E. Ball Road
(Ball exit off 57-Freeway)
Anaheim, CA

Club Nets (Listen for **W6ZE**):

28.375 ± MHz SSB
Wed- 7:30 PM - 8:30 PM
Bob AF6C, Net Control

146.55 MHz Simplex FM
Wed- 8:30 PM - 9:30 PM
Bob, WB6IXN, Net Control

7.086 ± MHz CW **OCWN**
Sun- 9:00 AM – 10 AM
John WA6RND, Net Control

VISIT OUR WEB SITE

http://www.w6ze.org

for up-to-the-minute club information, the latest membership rosters, special activities, back issues of RF, links to ham-related sites, vendors and manufacturers, pictures of club events and much much more.

Club Dues:

Regular Members	...$20
Family Members*	...$10
Teenage Members	..$10
Club Badge**	…….$3

Dues run from Jan thru Dec and are prorated for new members.

*Additional members in the family of a regular member pay the family rate up to $30 per family.

**There is a $1.50 charge if you'd like to have your badge mailed to you.

"RF" ORANGE COUNTY AMATEUR RADIO CLUB JULY 2011

FIELD DAY SUMMARY

THE ORANGE COUNTY AMATEUR RADIO CLUB - W6ZE

by: Ken / W6HHC & Bob / AF6C

YEAR	160M SSB	80M CW	75M SSB	40M CW	40M SSB	20M CW	20M SSB	15M CW	15M SSB	12M SSB	10M CW	10M SSB	6M CW	6M PHN	2M CW	2M PHN	220 PHN	440 PHN	UHF CW	UHF PHN	ATV	RTTY PKT	SAT-ELLITE	GOTA	- - - - TOTAL - - - - QSO's	/	(POINTS)
2011	0	58	176	168	217	253	703	32	198	0	16	40	0	57	0	37	0	16	0	0	0	0	0	139	2,110	/	5,278
2010	0	0	0	240	342	223	727	49	0	0	0	0	1	96	0	32	1	7	0	0	0	0	0	160	1,878	/	4,786
2009	0	277	126	838	807	974	970	495	368	0	5	450	11	375	0	125	18	20	**1**	0	0	0	2	130	5,992	/	17,446
2008	0	179	204	690	405	411	878	141	43	0	22	68	15	135	0	34	2	14	0	3	0	0	5	16	3,265	/	9,468
2007	1	356	310	910	830	988	1285	381	320	0	18	150	9	145	2	175	40	70	2	9	0	2	11	142	6,156	/	17,648
2006	0	28	20	89	512	156	664	16	10	0	0	0	0	38	1	85	0	7	0	0	0	114	0	113	1,853	/	4,514
2005	0	113	6	158	481	337	534	122	17	0	0	0	0	74	0	36	16	20	0	0	0	0	0	31	1,945	/	5,350
2004	0	166	239	37	412	131	477	31	105	0	1	114	0	0	0	46	12	20			0	0	1	0	1,792	/	4,316
2003	0	0	85	52	127	27	295	0	191	0	0	41	0	52	0	64	1	13			0	0	0	0	948	/	2,054
2002	0	26	69	192	279	76	229	0	485	0	0	18	0	62	0	68	6	10			3	2	0	3	1,528	/	3,648
2001	0	0	25	101	251	0	432	0	675	0	0	109	0	48	0	28	1	0			0	0	3	-	1,673	/	3,548
2000	0	19	20	88	91	0	625	0	794	0	0	121	0	36	0	72	7	15			0	0	1	-	1,889	/	3,992
1999	0	13	20	15	237	0	996	0	724	0	0	22		5	0	2	0	0			0	0	0	-	2,034	/	4,124
1998	0	24	75	65	136	100	250	0	624	0	0	82		0	0	46	17	12			0	7	1	-	1,439	/	3,270
1997	5	81	131	83	306	150	853	14	275	0	0	106		32	0	79	4	0			0	32	1	-	2,152	/	5,024
1996	-	146	228	104	125	283	673	40	605	0	0	217		121	0	32	0	40			0	13	1	-	2,628	/	6,428
1995	-	145	272	203	94	443	572	51	451	0	0	131		66	0	93	29	8			0	33	6	-	2,597	/	6,944
1994	-	114	114	208	45	486	748	85	761	0	13	312		58	0	94	33	0			0	31	0	-	3,102	/	8,078
1993	-	150	100	159	81	530	700	131	812	0	0	179		40	0	86	12	16			0	35	0	-	3,061	/	8,132
1992	-	0	294	200	110	541	555	0	840	0	0	232		13	0	74	0	1			2	41	80	-	2,983	/	7,530
1991	-	105	308	182	182	400	623	9	463	0	0	104		4	0	141	23	11			0	48	0	-	2,626	/	6,740
1990	-	0	0	70	144	0	370	0	747	0	0	131		39	0	114	14	26			0	2	-	-	1,657	/	3,454
1989	-	30	0	98	5	0	906	21	172	0	0	238		3	0	121	24	9			1	18	-	-	1,646	/	3,590
1988	-	127	0	93	75	2	359	0	570	0	144	81		0	0	32	0	-			-	14	-	-	1,497	/	3,726
1987	-	22	0	0	39	0	708	0	18	1	117	0		1	0	51	0	-			-	5	-	-	962	/	2,202
1986	-	0	46	219	78	0	488	0	45	10	0	0		0	0	82	0	-			-	0	-	-	968	/	2,374
1985	-	85	0	315	91	35	662	78	0	-	0	0		0	0	22	0	-			-	-	-	-	1,288	/	3,602
1984	-	18	0	313	0	32	196	32	350	-	0	0		0	0	0	0	-			-	-	-	-	941	/	2,672
1983	-	3	93	200	0	0	776	0	995	-	0	43		18	0	16	1	-			-	-	-	-	2,145	/	4,696
1982	-	0	105	59	238	40	352	19	515	-	0	72		0	0	155	27	-			-	-	-	-	1,582	/	3,400
1981	-	0	167	200	265	60	699	77	717	-	0	105		0	0	197	0	-			-	-	-	-	2,487	/	5,648
1980	-	20	149	205	235	471	318	52	1,025	-	0	226		12	0	100	36	-			-	-	-	-	2,849	/	7,194
1979	-	0	195	198	92	42	773	0	737	-	0	95		0	2	124	8	-			-	-	-	-	2,266	/	5,016
1978	-	16	196	246	170	30	981	57	558	-	13	145		0	1	164	23	-			-	-	-	-	2,600	/	5,926
1977	-	25	243	182	199	0	843	81	486	-	4	309		0	4	234	0	-			-	-	-	-	2,610	/	5,812
1976	-	99	254	152	487	21	600	64	210	-	2	54		0	0	2	0	-			-	-	-	-	1,945	/	4,566
1975	-	80	120	154	274	40	863	140	259	-	0	123		0	0	0	0	-			-	-	-	-	2,053	/	4,934
1974	-	6	161	6	333	0	630	12	342	-	0	110		0	0	0	0	-			-	-	-	-	1,600	/	3,248
1973	-	90	226	0	452	0	932	0	273	-	0	0		0	0	46	0	-			-	-	-	-	2,019	/	4,218
1972	-	0	50	0	350	0	521	0	530	-	0	0		0	0	94	0	-			-	-	-	-	1,545	/	3,090
1971	-	0	274	0	106	0	530	0	136	-	0	0		0	0	0	0	-			-	-	-	-	1,046	/	2,092
1970	-	0	272	0	0	0	531	0	426	-	0	0		0	0	0	0	-			-	-	-	-	1,229	/	2,458
1969	-	0	98	0	50	0	375	0	301	-	0	0		0	0	169	0	-			-	-	-	-	993	/	1,986
1968	-	10	224	62	396	93	328	24	430	-	0	68		0	0	145	0	-			-	-	-	-	1,780	/	3,938

Note: These are raw contacts taken directly from the log sheets. Adjustments have not been made for duplicate contacts,and bonus points have not been added yet. Final scores appear in QST.

OCARC Field Day 2011

Walter Knott Education Center - Buena Park

- - photo collage by Ken W6HHC

Heathkit of the Month #31:
by Bob Eckweiler, AF6C

Heathkit HD-15
Hybrid Phone-Patch

Introduction:

Does anyone phone-patch anymore? In the sixties and seventies when you tuned across the band you would inevitably hear hams running phone-patches. The proliferation of cell phones and inexpensive unlimited calling plans is likely why they have all but disappeared from ham radio.

A phone-patch allows a ham to connect his radio to the standard telephone 'POTS' line and let someone at the other end of the phone-line communicate with the person at the other end of the radio link; often this was used for third-party traffic. Phone-patches can be run between third parties in the US, and also to people in a limited number of countries that have third party agreements with the US.

Phone-patches were once very common. I built my first phone patch when I was barely a teenager. It used a popular war-surplus Lionel audio interstage transformer (yes, the same Lionel that makes electric trains).

Figure 1: HD-15 Front & Rear View

During the seventies I ran numerous phone-patches for a neighbor who's husband was working in South America. I also had the honor of running phone-patches between Bill Orr - W6SAI, who was on vacation in Hawaii at the time, and a family member who was living in southern Orange County. I got to visit Bill some years later in Northern California. For those who don't know W6SAI, he is the author of numerous ham articles and antenna books, as well as the *Radio Handbook*. Sadly, Bill became a silent key not too long ago.

The Hybrid Phone-Patch:

Simple phone-patches, like the one I built early on, use an audio transformer to couple the 600Ω phone-line to the 8Ω speaker and the high-impedance microphone input. Audio from the speaker is transformed to 600 ohms and merrily travels down the phone-line to the user at the other end. Likewise, audio from the phone-line is converted to high impedance and is sent to the transmitter mike input. However, audio from the receiver speaker is also sent to the mike input. If manual switching is used between transmit and receive, this presents no problem. But when the era of single-sideband began and made VOX operation popular, audio from the speaker would trigger the VOX making VOX phone-patch operation impossible.

This problem was solved by using a hybrid bridge circuit that effectively nulls-out the audio from the speaker at the transmitter mic input while letting audio from the phone-line pass. This requires a special transformer and a nulling circuit.

Heathkit Phone Patches:

Heath made many phone patches during its kit-building existence. They are:

Model	Description	From:	To:	Initial Cost:
HD-19	Hybrid Patch	1960	1965	$29.95
HD-15	Hybrid Patch	1966	1983	$24.95
SB-630	Station Console	1966	1974	$74.95
SB-634	Station Console	1974	1983	$179.95
HD-1515	Solid-State Patch	1985	1989	$49.95

Figure 2: The HD-19 From a 1961 Heathkit Catalog

The two station consoles not only include a hybrid phone-patch but also numerous station accessories all in one package. While this month the focus will be on the HD-15, we will take a quick look at the others too.

The Heath HD-19 Phone-Patch:

Heath's first phone patch presented a clue as to what was to come. It is one of the first kits to sport the dark green front panel color of the upcoming SB-line. The HD-19 (Fig. 2) circuit is almost identical to the HD-15 which will be discussed next. It differs in that it includes switching for a high impedance microphone. The microphone is connected to the HD-19 and a cable from the rear of the HD-19 connects to the microphone input of the transmitter. When the patch is not in use the microphone is connected to the transmitter and when the patch is turned on the microphone is disconnected and the phone patch is connected to the transmitter. There are also minor circuit variation between the HD-19 and later HD-15. The HD-19 case measures 7-3/8" W x 4-1/8" H x 4" D.

The Heath HD-15 Hybrid Phone-Patch:

The HD-15 is one of many items manufactured by Heath during the existence of the SB-line that didn't carry the SB prefix, but followed the SB styling. It is enclosed in a low-profile case measuring 9-1/4" W x 2-5/8" H x 3-5/8" D. The front panel incorporates a VU meter and three controls.

The VU (Volume Units) meter monitors the energy being put onto the phone-line; too much and you will create cross-talk which may invoke a visit from the "Phone Police". The gain controls set the operating levels. The receive level can be monitored by the VU meter and the transmit level by the transmitter's ALC meter reading.

Item	Type	Marking
VU	Meter	-20dB to +3dB
XMTR. GAIN	Pot	0 - 10
RCVR. GAIN	Pot	0 - 10
PATCH	Switch, Rotary	OFF - ON

The rear panel contains a five-screw-terminal connector for the two-wire phone line, the speaker lead, receiver audio and their common ground. Two RCA jacks provide audio to the transmitter. Available are high impedance audio and 600-ohm audio. A control for nulling the balance circuit and a meter switch are also located on the back panel:

Item	Type	Marking
(Meter Function)	Slide Switch	NULL - MONITOR
(Xmtr audio)	RCA Jack	HI-Z
(Xmtr audio)	RCA Jack	600Ω
NULL - ADJUST	Pot	(none)
(Terminal Strip)	Screw Term.	1 GND [audio]
|	Screw Term.	2 SPKR [audio]
|	Screw Term.	3 RVCR [audio]
|	Screw Term.	4 [phone] LINE
(Terminal Strip)	Screw Term.	5 [phone] LINE

The only adjustment to the HD-15 is the nulling of the balance circuit. This is accomplished after fully connecting the patch by placing the meter switch on the rear panel to NULL and then tuning the receiver to a strong heterodyne (you can use the crystal calibrator of the receiver) so a steady tone is coming from the receiver. With the phone-patch switched on advance the receiver volume and patch RCVR. GAIN control until you get a deflection on the meter of about 0 dB. Adjust the NULL control on the back until the meter reads minimum. You should be able to get a null of between 20 and 30 dB on the meter. This represents the isolation between the receiver audio and the transmitter audio.

Operating the phone-patch is quite simple. A phone call is established between you and the third party. If the third party is not familiar with using a phone-patch, they need to be briefed on the basic FCC rules and to remember to say "over" when they are done talking. They also need to be briefed on how VOX works if it is to be used. (I've found that unless the third party is experienced, they will continually try to interrupt when the distant station is transmitting - so I usually manually switched between transmit and receive.) Once briefed you need only to switch on the phone-patch and monitor on your phone handset. Some hams who ran phone-patches frequently used telephone operator headsets to monitor.

The HD-15 Circuit:

The schematic of the HD-15 is shown in Figure 3; it is very straightforward. The phone-line is connected through a pi-filter (the two 45 µH coils and C1 - C4) to isolate any RF present. C5 DC isolates the phone-line so it will not create

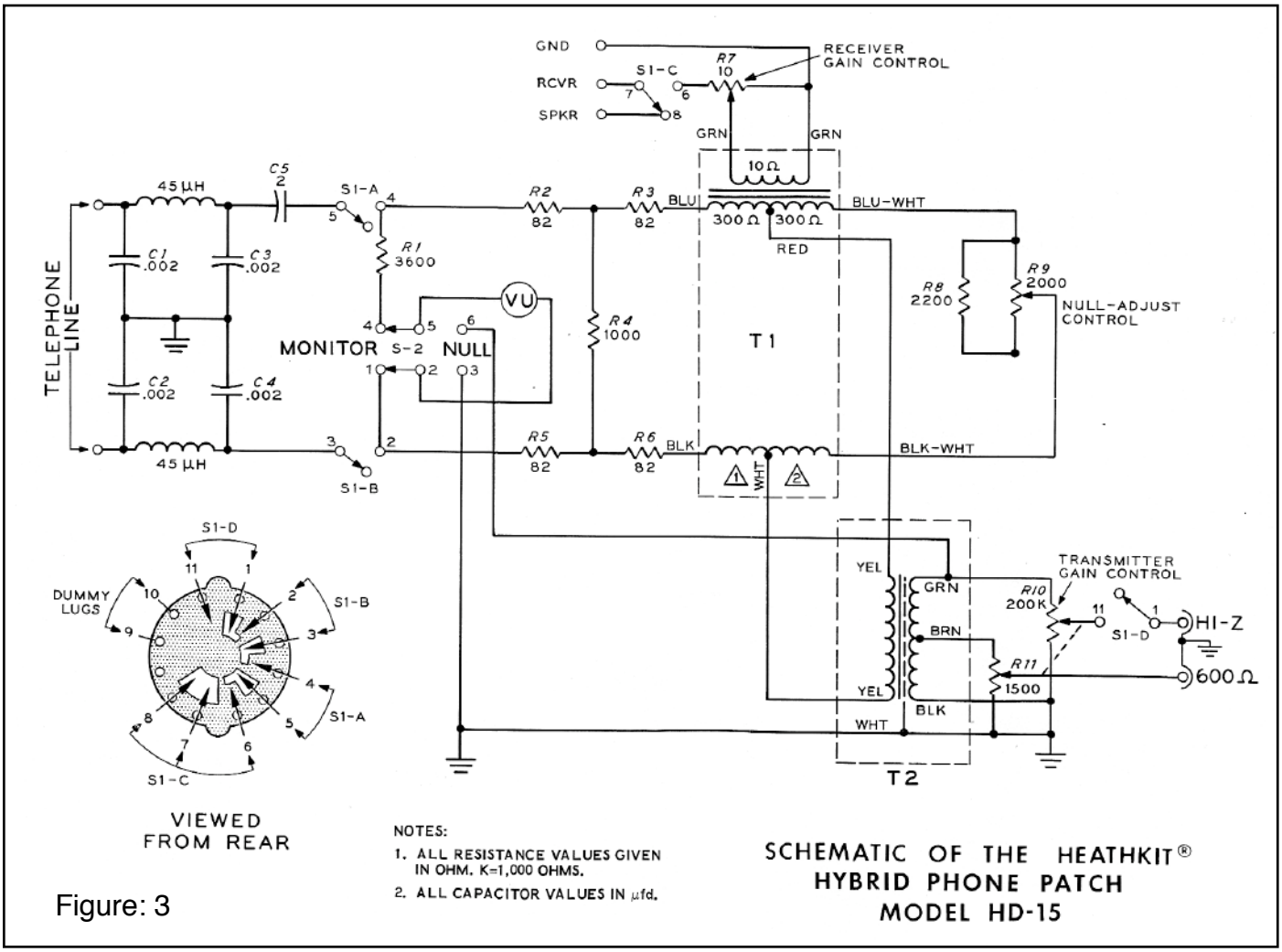

Figure: 3

an "off-hook" condition when the patch is on. S1a and S1b isolate the phone-line when the patch is off. In monitor mode the VU meter monitors the level entering the phone-line. A VU of 0 dB (About 2/3 of the meter movement) represents 2.25 milliwatts into the phone-line (1.23V at 600Ω). This is the maximum allowed signal. R1 sets the calibration of the VU meter.

The null circuit is made up of T1, a special hybrid transformer and R9. In transmit, audio voltage entering from the phone-line appears on both the primary of T1 and the secondary of T2. Each is attenuated by 6dB. The audio on the secondary of T1 is not useful and is harmlessly dissipated in R7 and in the receiver; the audio reaching T2 is transformed to a high impedance output and to 600Ω output; both are available on the rear panel depending on transmitter audio requirement.

On receive the audio from the receiver is coupled to the secondary of T1. This creates a voltage V_1 across each of the two 300Ω primary windings. These voltages are equal and in phase. The voltage from the left winding appears across the phone-line and the left lower isolated transformer winding. The voltage from the right winding appears across the balance pot (R9) and the right lower transformer winding Since the two lower windings are identical and wound on the same core, their voltages V_2 are also identical and in phase. The voltage reaching the microphone appears between the red and white leads (the center taps of the upper and lower windings). The voltage contributed by the left loop is: $+ V_1 + V_{PL} + V_2$. The voltage contributed by the right loop is: $-V_1 - V_{BC} - V_2$. Since the V1 and the V2 are of opposite sign they cancel and $V_{xmtr} = V_{PL} - V_{BC}$. If the balance circuit is adjusted to the same impedance as the phone-line then the currents i_1 and i_2 are also identical and $V_{PL} = V_{BC}$. This means no signal from the speaker audio reaches the microphone input.

You may wonder about three things. First, what is the purpose of R8 across R9. This just changes the linearity of R9 to make the resistance change more slowly near the middle of the pot setting and make nulling more easy (On the original HD-19 just a 1 KΩ pot was used.) Second, what are the two lower windings used for in the transformer? These keep the phone line balanced thus reducing the chance of hum on the phone-line. Finally, what do R2 through R6 do in the phone line circuit? They are actually quite critical. They form a 600 Ω attenuation pad that isolates the impedance of the phone-line from the hybrid transformer. Phone-line impedances vary around the 600 Ω ideal and the pad provides isolation to make the phone impedance look more stable to the transformer and reduce any reactive component; this is at the cost of signal loss. Luckily the receiver audio, phone audio input and output and transmitter audio needs are all sufficient that the loss still allows ample signal levels.

S1-c switches the audio from the speaker to the secondary of T1 when the phone-patch is on

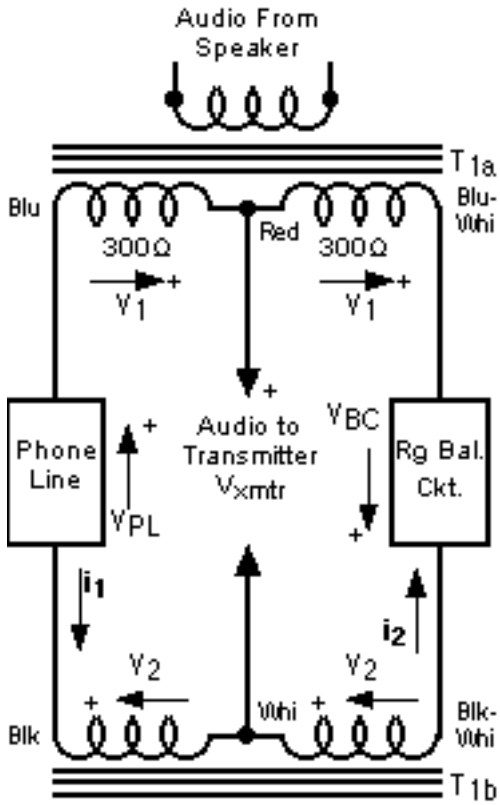

Figure 4: Transmit Null Circuit

and S1-d disconnects the high impedance mic input from the transmitter when the phone-patch is off, since it could shunt the mic causing low transmit audio.

The HD-15 is specifically designed to work with the SB-line of transmitters and transceivers. Both have an input in the back for high impedance phone-patch audio. the lower 600Ω impedance available at the phone patch output allows the HD-15 to work with numerous other rigs of the day (and most of today's radios too).

The Heath SB-640 Station Console's Patch:
The SB-640 station console was discussed briefly last month. Built into it is the identical circuit to the HD-15 except for changes needed to integrate the other functions (meter switching is one example since the meter is used not only with the phone-patch, but also with the SWR bridge.)

The Heath SB-634 Station Console's Patch:
Like the SB-640, the SB-634 also has a built-in phone patch based on the circuit of the HD-15. However, it does have one interesting and historical change. A trap filter was added to the phone-line to attenuate any 2,600 Hz tones that might come from the receiver and enter the phone-line. The SB-634 came out not too long after the phone-phreaking and blue-box era. In those days a tone at 2,600 Hz could be used to cause a long-distance disconnect and leave a phone connection open in the trunk. From there, using the proper tone signaling codes, a hacker was able to dial any number worldwide without charge. When using a phone-patch there is always the possibility of a heterodyne occurring and causing a 2,600 Hz tone being sent into the phone line. The trap helps prevent the tone from getting back to the phone company's central office.

The Heath HD-1515 Solid-State Phone Patch:
The last phone-patch kit manufactured by Heath was the HD-1515. It is significantly different in design and operation from the earlier patches. The HD-1515 is based on the Texas Instruments TCM-1705 Phone Set Integrated Speech Circuit IC, which, along with an LM-324 quad-operational amplifier and four transistors provides the necessary hybrid features without the need for an expensive hybrid transformer. All the other phone-patches mentioned in this article are passive devices; they do not need a source of power to operate other than the signals themselves. This is not the case with the HD-1515 since power is needed to operate the solid-state devices. A typical phone-line has about 48 VDC across it when on-hook. Off-hook (the phone picked up from the cradle) the voltage can vary depending on distance from the central office and number of phones in use. Also the polarity can flip, and the voltage can drop to zero during pulse dialing. Heath cleverly designed a circuit that harnesses power from the phone line to operate the patch. If used on distant lines though, the line voltage may not be sufficient to operate the phone, so Heath also included a standard 9V battery that may be optionally installed should the line voltage be insufficient to operate the phone-patch.

I purchased my HD-15 the the local Ball Rd. Heathkit store on June 14, 1969 (exactly 42 years later to the day I started this article - what a coincidence!). It replaced the home-brew patch that I got rid of before leaving for college (I did keep the Lionel transformer!). Over the next decade I handled hundreds of phone patches on the HF bands, with only a few minor incidents, but many a happy "thank you". It was a rewarding part of ham radio.

73, from AF6C

Remember if you come across any old Heathkit Manuals or Catalogs that you do not need, please pass them along to me.
Thanks - AF6C

TechTalk94
DATV Testing Report - Part 5 (KomplettSender DVB-S)

by Ken Konechy W6HHC
&
Robbie Robinson KB6CJZ

We bench-tested the DVB-S home station for W6HHC in TechTalk83 last year, and then field tested the W6HHC DATV station during a COAR RACES emergency communications drill in TechTalk87 to transmit video from the field back to an Emergency Operations Center (EOC). The COAR RACES group in the city of Orange was very fortunate to obtain funding to purchase new Digital-ATV equipment to create a portable field station. This article describes the bench testing of the new DATV equipment that includes a KomplettSender DVB-S transmitter (from SR-Systems in Germany) and then reports the results of field testing this portable DATV equipment.

KomplettSender DVB-S Transmitter

If you look at the block diagram in **Fig 1**, you will see that KomplettSender DVB-S transmitter consists of three boards from SR-Systems (MPEG-2 encoder, MiniMOD DVB-S exciter, and an LCD control panel) and a first-stage RF power amplifier (PA) for the 1.2 GHz band. The first-stage PA is a 2W (FM rating) from DGØVE and is capable of running "barefoot" in many DATV situations.

The KomplettSender transmitter puts all of these components in a nice plastic cabinet for running on 12V DC with a BNC connector on the back for RF output. **Fig 2** shows the inside modules of the KomplettSender unit. The board in lower-right of the photo is the MiniMOD DVB-S exciter for 1.2 GHz.

Figure 2 – View of KomplettSender transmitter from rear with top cover removed

Fig 3 shows the front panel of KomplettSender transmitter that contains a very useful LCD Display and a PTT button as well as a jack for external PTT switch.

Figure 3 – Front panel of KomplettSender with LCD Display and Menu Controls

Figure 1 – Block Diagram Showing W6OPD DATV Field Station being Tested

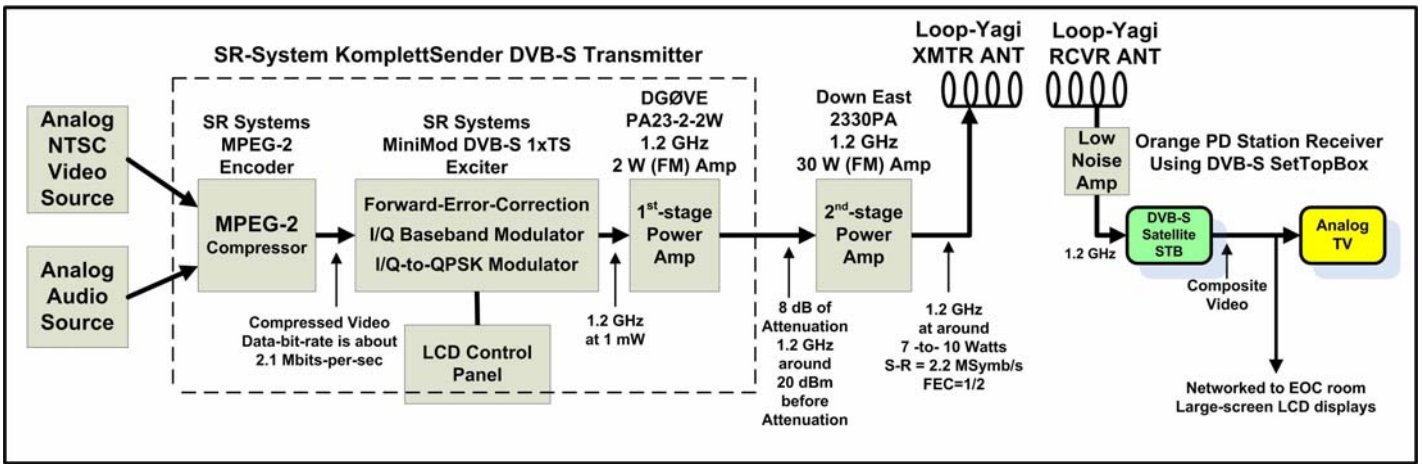

Table 1 – Power Output measurements from First-Stage RF Amplifier

KomplettSender	
MinMOD Gain Setting	DG0VE amp Output dBm
-	
-	
7	Not Measured
8	Not Measured
9	20
10	22
11	23
12	25
13	Not Measured
14	25.5
15	26.2

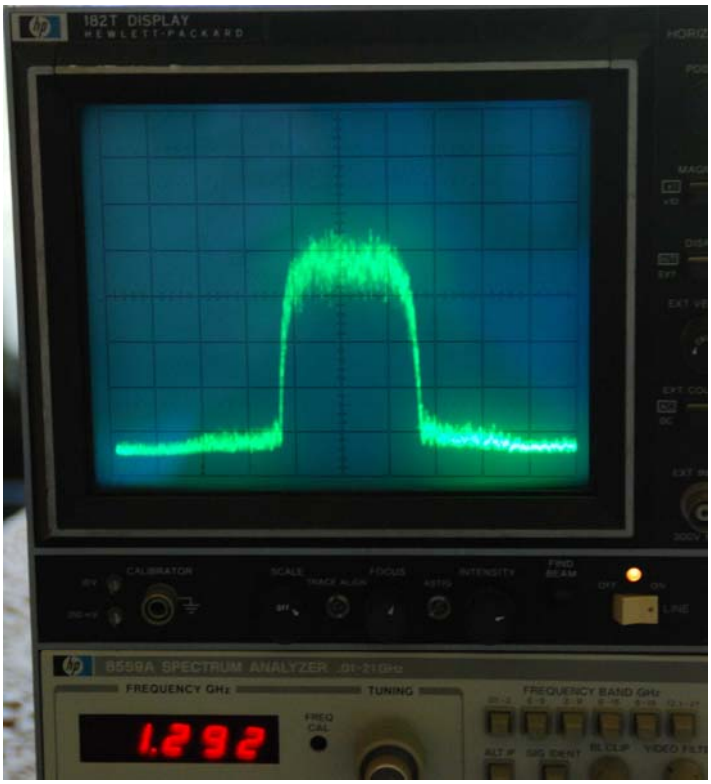

Figure 4 – HP Spectrum Analyzer looks at output from the DG0VE First-Stage RF PA

Fig 4 shows that the output signal quality of the DG0VE first-stage RF Power Amp was very clean (without spectral regrowth "shoulders") even when being driven to the maximum by the exciter RF output settings.

By running a Windows7 freeware application called uCon (like Hyper-Terminal), We can read out the settings on the KomplettSender boards and make changes to the settings via 9-pin RS-232 port. **Fig 5** is a typical display of the settings menu as seen on the notebook computer. I can also access the same settings readout/changes via the LCD panel controls.

```
DVB MiniMod Firmware V54.52 LOWDVBT
(c) 2007-2010 maintech GmbH

SI570 XTAL: 114311869 Hz  REF: 100000000 Hz
OnBoard REF: SI570
OnBoard VCO: ADF4350
OnBoard Gain: I/Q
Real HF output range (on-board upconverter):
 * 68750 - 2300000 kHz
FPGA firmware v051.
Encoder firmware upload done (tvp5146,
0x01600625, low delay).
:
:
Modulation Settings
1) Modulation                (DVB-S)
2) TX Enable                 (stand by)
3) Output Frequency          (1292000 kHz)
4) Spectrum                  (normal)
5) Carrier Only              (no)
6) Output Gain               (9)
7) Symbolrate                (2200 ksym/s)
8) Coderate (FEC)            (1/2)
0) exit menu
```

Figure 5– Sample Screen-dump of RS-232 interface to MiniMOD Exciter Settings Menu

Second-Stage Power Amp

The block diagram in **Fig 1** shows that the final-stage 1.2 GHz PA is a model 2330PA 30W unit (the FM modulation rating) from Down East Microwave (in Florida USA). **Fig 6** shows the rugged well-cooled construction of the Down East Power Amp.

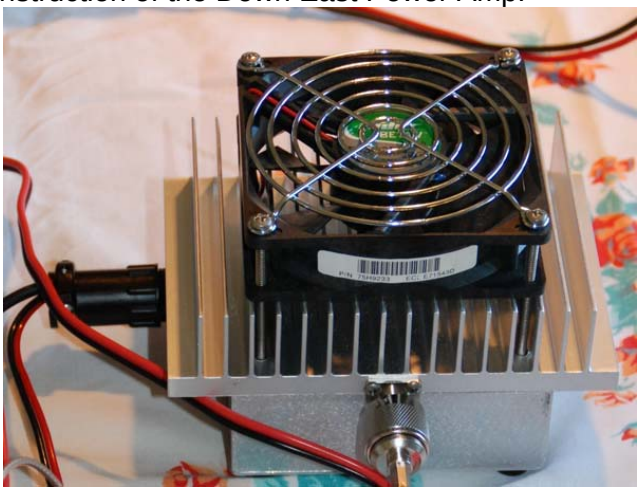

Figure 6 – Construction of Down East Model 2330PA Power Amplifier

Table 2 – RF Power Measurements for Transmitting Station

W6OPD Field Transmitter					
MiniMOD Gain Setting	**DG0VE PA Output dBm**	**Attenuator to final RF PA**	**PA Pwr Out dBm HP 432A**	**PA Pwr Out Watts HP 432A**	**DEMI Spectrum Quality**
7	Not Measured	6 dB	N/M	N/M	Good shoulders
8	Not Measured	6 dB	N/M	N/M	1 shoulder -30 dB
8	Not Measured	7 dB	36.5	4.7	1 shoulder -38 dB
8	Not Measured	8 dB	N/M	6.31	1 shoulder
9	20	0 dB	N/M	N/M	bad shoulders
9	**20**	**8 dB**	**41.0**	**12.6**	2 shoulder -27 dB **W6OPD** PA
9	20	8 dB	41.8	15.1	1 shoulder **W6HHC** PA

Table 2 shows power measurements made with the KomplettSender connected to the DEMI second-stage PA using a HP Model 432A Power Meter (a bolometer type). The final settings used are high-lighted in **Table 2** in **BLUE**. We chose to add an 8 dB attenuator between the DG0VE PA and the Down East Microwave PA. The attenuator allowed us to adjust gains for maximum output power with acceptable spectrum re-growth (spectrum distortion).

The identical DEMI 2330PA from the home station of W6HHC is also listed in **Table 2** where similar results were measured compared to the COAR W6OPD amplifier from DEMI.

Figure 7 – Robbie KB6CJZ is shown with HP Model 432A Power Meter and HP Model 8559A Spectrum Analyzer 0.01-to-21 GHz plug-in

Fig 8 shows the spectrum signal quality coming out of the second-stage DEMI PA using the final settings described in **Table 2**. Our goal was to keep the "shoulder" (distortion) down at least 26 dB below the carrier.

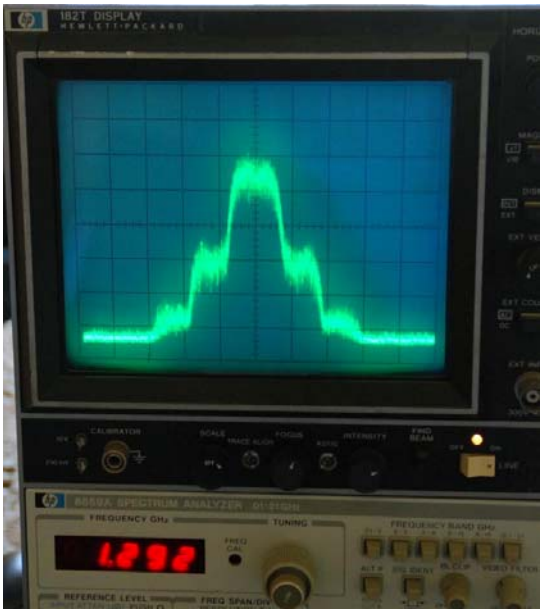

Figure 8 – HP Spectrum Analyzer looks at Down East output signal quality at 3MHz RF BWallocated

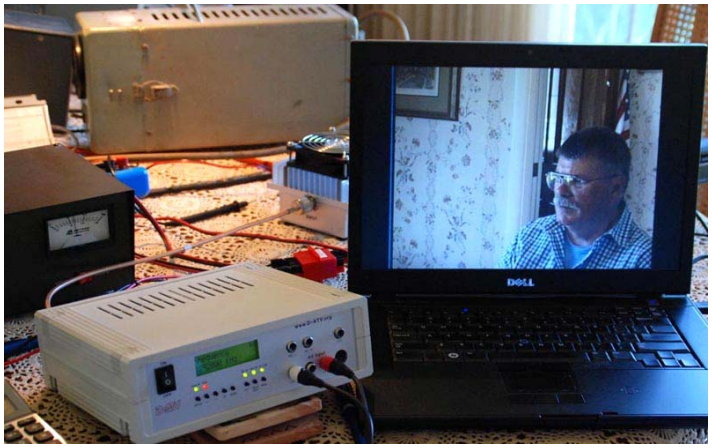

Figure 9 – First W6OPD DATV Video received during Bench-Tests (Ken W6HHC is shown)

Field Loop-Yagi Antenna

The SWR testing of the new DATV field antenna was successful….SWR at 1.292 GHz was about 1.5:1 using a Bird Watt meter. The center-mounted loop-yagi beam antenna is the model 2325LY from Directive Systems in Maine USA, has somewhere between 23 and 25 elements???…can you count the exact number of elements in **Fig 10**?? The beam weighs only 3 pounds (1.4 KG)!! This is essentially the same antenna that is used at the Orange PD building for receiving DATV.

Figure 10 – COAR Member KB6CJZ measures SWR on 1.2 GHz "Elephant Gun" Loop-Yagi

Cost of DATV Field Transmitter

Table 3 totals up the cost for the DATV portable field station that we have described. The most expensive item, the KomplettSender DVB-S, lists for 833 Euros in Europe. Outside of the EU, the VAT can be removed from the selling price.

Field Test

As we have said before, bench-testing is important …but results from the DATV field tests are exciting! The location chosen was a ridge up in the foot-hills of eastern part of the City of Orange that had been tried three years ago using 440 MHz analog-ATV. No video signals could be received from this ridge at the Orange PD building during the earlier analog-ATV field tests.

Figure 11- Photo of COAR RACES field test crew next to the 1.2 GHz Field Antenna up on the ridge

Table 3 – Cost of COAR DATV Portable Field Station

ITEM	Description	Manuf'r	Model	Cost	NOTES
1	NTSC Video Camera			N/A	Already owned by COAR
2	0.4 W DVB-S Transmitter in cabinet	SR-Systems	DVB-S KomplettSender	US$1300	includes shipping, Euro/$ fluctuations, wire-transfer and US duty fee (no VAT)
3	BNC-to-N coax cable	Pasternack	PE3061-18	US$35	
4	30W 2nd-Stage power amp	Down East Microwave	2330PA	$US240	plus shipping (tuned for 1.290 GHz)
5	1.2 GHz Loop-yagi antenna	Directive Systems	2325LY	US$140	with shipping
6	Andersen-connector 12V distribution block (8 outlets)	PowerWerx	PS-8	US$28	
	TOTAL			**~US$1750**	

The tests were conducted from near the QTH of Kathleen K6IBH (up on a ridge across Jamboree Road to the West from Loma Ridge) and great pictures were sent back to the Orange PD EOC Room. This ridge allows camera video to the East of the ridge toward Sierra Peak, Irvine Park, Loma Ridge, and Saddleback Peak. East is the direction that wild grass fires normally approach our city. The DATV signals were fairly weak because a hill was sloping down into the "line-of-sight" transmission path…and we probably had to "knife-edge" around the sloping hill side to reach the OPD EOC.

Figure 12 – Video being received during Field Test on large-screen LCD displays in EOC room

The critical DATV settings selected for DVB-S during these COAR field tests are listed below:

- **Frequency** - 1.292 GHz (center freq)
- **FEC** - 1/2
- **Symbol-Rate** - 2.2 MSymbols/sec
- **RF BW(allocated)** - 3.0 MHz
- **Camera** - NTSC
- **Video Resolution** - D1
- **MPEG-2 GOP Mode** - IBBP

In **Fig 13** below, the QUALITY level read 100% (P5), but the signal level read "only" 45%. This is a mis-leading SIGNAL level since background noise at the OPD usually produces a background SIGNAL level on the receiver to run at 40%. We disregard the value of the SIGNAL strength readout. (BTW quite a few neighbors dropped by to ask about what we were doing? Good opportunity for talking about EmmComm)

Figure 13 – The weak DATV signals received at EOC produced perfect DATV pictures with 100% QUALITY

Summary

The DVB-S field equipment COAR chose worked well. COAR's DATV field testing results have exceeded our expectations and has produced useful video from many difficult field locations. During the DATV planning efforts for COAR, we had many concerns whether DVB-S could handle the multi-path ghosts that had plagued earlier analog-ATV field tests. We were worried that DVB-T technology (with it very robust multi-path protection) might be the only useful DATV technology for COAR RACES.

The digital-ATV DVB-S video quality from the field is much improved over the older analog-ATV technology. This improvement is achieved because DATV technology uses Forward-Error-Correction (FEC) to overcome the "ghosts" and weak-signal conditions caused by elevated-freeways, buildings in the downtown area and the hills on the outskirts of our city.

Interesting DATV Links

- AGAF D-ATV components (Boards) – see **www.datv-agaf.de** and **www.AGAF.de**
- SR-Systems D-ATV components (Boards) – see **www.SR-systems.de** and **www.D-ATV.org**
- DGØVE microwave RF amps, up-converters, down-converters – see **www.DG0VE.de**
- Down East Microwave RF amplifiers – see **www.DownEastMicrowave.com**
- Kuhne Electronics (DB6NT) RF Amplifiers – see **www.Kuhne-Electronic.de**
- British ATV Club - Digital Forum – see **www.BATC.org.UK/forum/**
- British ATV Club – select from about 25 streaming repeaters – see **www.BATC.TV/**
- German ATV portal for streaming repeaters and forum – see **www.D-ATV.net/**
- Orange County ARC newsletter entire series of DATV articles – see **www.W6ZE.org/DATV/**
- TAPR Digital Communications Conference free proceedings papers – see **www.TAPR.org/pub_dcc.html**
- Darren-G7LWT site for "DATV Primer" – see **www.G7LWT.com/datv.html**
- Rob-MØDTS D-ATV site including details of F4DAY-design – see **www.M0DTS.co.uk/datv.htm**
- Yahoo Group for Digital ATV - see **http://groups.yahoo.com/group/DigitalATV/**

Attention Members!!!

Do you know a fellow ham that would be interested in joining OCARC? Do you have a friend that is curious about ham radio and wants to learn more about our hobby? Why not invite him or her to one of our exciting monthly meetings?!?! The meetings are fun, informative and entertaining. Check out the upcoming events page in this newsletter to see the exciting speakers we have lined up for the next couple of months. Don't forget about the great raffle prizes too. So bring a visitor to one of our meetings, and help **your** club expand!

Make sure to inform your friends of our club's website, which is always kept up to date. Information on club meetings, activities and our newsletter archive make it a worthwhile site to surf!
http://www.w6ze.org

OCARC Board Meeting Minutes for: June 11, 2011

The OCARC Board meeting was held at the Jägerhaus Restaurant, 2525 East Ball Road, Anaheim, and called to order by Paul Gussow W6GMU (President) at 8:19AM Saturday, June 11, 2011. Roll was called by Doug Britton W6FKX (Secretary). There were a total of 8 directors and 9 visitors – Brett Collingwood W6BAC, Kris Cutting W6KJC, Carl Flint N8AE, Dee Flint N8UZE, Lee Fuller WB6LEE, Tim Goeppinger K6GEP, Kristine Jacob KC6TOD, Dianne Konechy, and Robby Robinson KB6CJZ. There was a quorum with the directors present.

DIRECTOR REPORTS:

- Vice President George Jacob N6VNI – George reported that we had access to the field day site prior to field day from 6am to 6pm if needed; please wear the OCARC name badges. George will be picking up the keys to the site on June 22nd and will stop by the police department requesting additional patrols during field day. George also reported that the June General Meeting would be a presentation on the construction of the Hong Kong Airport by Dennis Kidder.
- Treasurer Ken Konechy W6HHC – reported on the club's YTD cash flow through 6/10/2011. Ken also reported that the club's account totaled over $5000.
- Secretary Doug Britton W6FKX – no report this month.
- Activities Kristin Dankert K6PEQ – absent, no report.
- Membership Jeff Hall W6UX – membership roster current, and had submitted the roster to Bob AF6C to publish on the OCARC website. Ken W6HHC requested a pdf version of the roster to mail out to club members.
- Publicity Steve Brody N1AB – Steve reported that he had notified 17 local high school science clubs about the upcoming field day. Steve also contacted local newspapers about the upcoming field day, but had received no response. He was contacted by an online magazine which interviewed him about the club and would notify us when it was published.
- Technical Bob Eckweiler AF6C – Bob reported that the club's generator was serviced, a few extra parts obtained, and it's ready to go for field day.
- Directors-at-large – Dan Dankert N6PEQ – absent, no report.
  Larry Mallek K6YUI – reminded the board and visitors that the upcoming weekend will be the VHF contest.

OLD BUSINESS:

- **RF Newsletter "Rotating" Editors – Thank You to all who volunteer!**
  - June – Kris KC6TOD
  - July – Paul W6GMU
  - August – Kristin K6PEQ
  - September – Doug W6FKX
  - October – Kris KC6TOD

- **Field Day Update** – Doug W6FKX made a motion to accept the proposed field day budget of $1600, Larry K6YUI seconded, passed unanimously.

- **OCARC equipment inventory –** Ken W6HHC put together an inventory of club equipment, and where each item was located. A few items such as the club's ARRL flag and US flag locations are unknown. Ken also mentioned that the club's old generator and trailer needs a new storage location.

- **Portables–in–the–park –** Jeff W6UX reported no specific plans at this point; perhaps the next event will be planned for August if there is enough interest. Tim K6GEP suggested having the event during the California QSO Party, the 1st weekend in October.

- **Bob AF6C's Kit-Building Class –** Bob discussed some possible kits, bandpass filter? No specific plans at this point.

- **Drive – in mobile amateur event –** Steve N1AB passed a preliminary proposed event plan which included an application to be filled out by the participants. The current plan is to hold the event for the September (16) general club meeting. Discussion of the event included the decision to have judges using objective criteria, have pre-registration perhaps limited to 25 vehicles, have the Red Cross rope of some of the parking lot area to reserve for the event, and start set up at 630pm. Steve made a motion to the board to authorize a $50 award, 2nd by George N6VNI, the motion unanimously passed.

- **Orange County Fair – OCARC participation –** volunteers needed for time slots for July 20 and August 6. Contact Kristin Dankert K6PEQ if you are interested.

NEW Business

- A suggestion was made that the club should start bring refreshments to the general meeting (coffee), as the Red Cross would no longer be providing this.

GOOD OF THE CLUB – Nothing to report

Motion made to adjourn meeting by Paul Gussow W6GMU, seconded by Larry K6YUI and unanimously approved.

Meeting adjourned 9:25AM

Respectfully submitted:
Doug Britton W6FKX, OCARC Secretary

OCARC General Meeting Minutes for: June 17, 2011

The OCARC March General Meeting was held at the Red Cross complex in Santa Ana, called to order by OCARC President Paul Gussow W6GMU at 7:00 pm on Friday evening, June 17, 2011. There were a total of 53 members and visitors present. Nine club officers were present for a quorum.

Paul W6GMU opened the meeting with the Pledge of Allegiance. George N6VNI introduced our speaker for the evening, Dennis Kidder W6DQ. Dennis presented a very interesting summary of his 4 and half year involvement with the construction of the Hong Kong Airport, at that time the largest construction project in the world, which was completed in 1997.

Dennis Kidder W6DQ presents the story of the new airport in Hong Kong

Dennis presented a terrific program for us this evening. The construction of the airport planned and occurring as Great Britain returned control of Hong Kong back to China in the late 90s. A few highlights of the construction project include:

- The new airport was constructed 40 km from the city, requiring the construction of an expressway, train, and bridges
- "Greenfield" project, no infrastructure in place at the beginning
- Over 30,000 workers employed, 1/2 to 2/3 of them being foreign labor
- Required temporary housing onsite for employees during construction
- Construction cost of $50 Billion

- Terminal designed by Norman Foster; from the air, resembles a bird in flight
- 4.5 million square feet, mostly for retail on passenger side
- Airport supports tourism just for retail shopping
- Built to state of the art at the time, set new standard for modern airport construction, system management and facilities
- Opened June 1998, handled 220,000 passengers on first day
- 1st official flight was Air Force One, carrying President Bill Clinton

Thanks, Dennis for an interesting program.

SHOW & TELL – Nicholas AF6CF presented a project he completed just in time for field day.

Nicholas AF6CF and his AC POWER frequency meter, voltage meter, and polarity-checker that he built for Field Day

Remember if you have something for the Show and Tell, bring it to the next meeting!

Field Day 2011 – Jeff Hall W6UX and Doug Britton W6FKX gave a brief update on the status of OCARC Field Day; all ready to go. A last request for operators and last chance to sign up for meals was made.

GOOD of the CLUB – Kristin K6PEQ made a request for club members to volunteer for time slots in OCARCs Orange County Fair booth, particularly the opening and midday shifts.
George N6VNI encouraged early bird registration for the upcoming HAMCON 2011 in Torrance, saying that early bird registration would be extended to the end of the month of June.

Just a reminder that the OCARC Board Meetings will now be held on the second Saturday of each month at 8:15 AM at the Jagerhaus Restaurant, 2525 East Ball Road, Anaheim. Visitors are welcome.

A motion to adjourn meeting at 9:01 pm was made by Steve Brody (N1AB), and seconded by Doug Britton (W6FKX).

And thanks again Ken W6HHC for providing the photos!

Respectfully submitted by:
Doug Britton W6FKX
OCARC Secretary

You don't need to write like William "Bill" Shakespeare in order to write an article for the RF Newletter. In fact, we prefer articles without the words "Thy", "Whilst", "'Tis" and "Oft".

Do you have an idea for a newsletter article? Maybe you have acquired a new piece of equipment, designed or constructed a new antenna, took a trip focused around ham radio, want to share an amateur radio related experience or discuss a technical topic. Why not write an article for the monthly RF newsletter? The article can be short or long, simple or elaborate, and can even include pictures!

The RF newsletter relies on articles from our members. So why not give it try? Write an article and send it to the newsletter editor. It's fun, and at the same time, your contribution helps support our club and hobby!

If you want you can also try your hand as the newsletter editor. We have a rotating editor monthly and would love to have someone new give it a try. There is a template and it is easy and fun!!

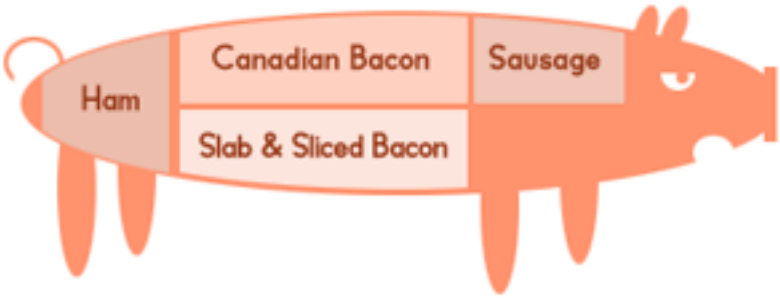

Ham Cuisine

by Kristin Dankert, K6PEQ

Aegean Island Ham Sandwich

While you're eating this yummy sandwich, imagine that you are relaxing on a beach chair in the Mediterranean with your favorite QRP rig and a vertical in the water or reading a good book with the sound of the waves crashing in the background.

Ingredients:
1/2 cup shredded ham
1 tablespoon olive oil
2 teaspoons fresh lemon juice
1 cup spinach leaves
1 teaspoon dried oregano
2 pita bread halves

Cooking Directions:
In a small bowl, toss together ham, olive oil, lemon juice, spinach and oregano. Divide ingredients evenly between pita halves.
Serves 2.

Serving Suggestions:

Serve with marinated olives and some sweet potato fries for a side. This Aegean island ham sandwich goes well with a Pina Colada. Then again, I typically recommend a Pina Colada with any meal.

ARRL Contest List 2011

August	6-7	ARRL UHF Contest
	21	ARRL Rookie Roundup - RTTY
	20-21	ARRL 10 GHz and Up Contest
September	10-12	ARRL September VHF QSO Party
	17-18	ARRL 10 GHz and Up Contest
	24-25	ARRL International EME Competition
November	5-7	ARRL November Sweepstakes (CW)
	19-21	ARRL November Sweepstakes (Phone)
	19-20	ARRL EME Contest, Round 2
December	2-4	ARRL 160 Meter Contest
	10-11	ARRL 10 Meter Contest
	18	ARRL Rookie Roundup - CW

HAMCON 2011

ARRL Southwest Division

Amateur Radio Convention

September 9, 10, & 11, 2011

Marriott Torrance South Bay

3635 Fashion Way, Torrance, CA 90503 1-800-228-9290 Hotel Reservation Code: HAMCON

REGISTRATION FORM

ALL ATTENDEES MUST BE REGISTERED - Please list all additional attendees

No Charge for Children under 16 when Accompanied by a Registered Adult

Call Sign:_____ Last Name: _____ First Name:_____

Address:_____City:_____

State: _____ZipCode:_____ Email:_____

ADDITIONAL ATTENDEES (all adults must pay admission)

NAME (PLEASE PRINT) CALLSIGN CHILD ADULT

_____ _____ _____ _____

_____ _____ _____ _____

_____ _____ _____ _____

_____ _____ _____ _____

REGISTRATION OPTIONS	Price	Qty	Total
EARLY BIRD (Postmarked/Submitted by June 30, 2011)	$15.00	_____	@$15.00 = $_____
PRE-REGISTRATION (Postmarked/Submitted byAug. 1, 2011)	$18.00	_____	@$18.00 = $_____
ON-SITE REGISTRATION	$20.00	_____	@$20.00 = $_____
Convention Pins (While Supplies Last)	$ 5.00	_____	@$ 5.00 = $_____
Breakfast Tickets	$25.00	_____	@$25.00 = $_____
Luncheon Tickets	$30.00	_____	@$30.00 = $_____
Banquet Tickets	$45.00	_____	@$45.00 = $_____
Excursion (Bus Tour from Hotel to The Getty Museum) Convention Pin Included	$30.00	_____	@$30.00 = $_____

_____Beef _____Chicken _____Vegetarian

Mail / Make Checks Payable To:

HAMCON, INC.

P.O. Box 333

Pomona, CA 91768

For Information Updates Visit

HAMCONINC.ORG

STAFF USE ONLY

Date Received:_____# Adults Registered_____

Children Registered _____# Pins Ordered_____

Check # _____ Receipt #_____

Comments:_____

_____

Seating is limited - Reserve your seat now! **TOTAL: $_____**