RF

ORANGE COUNTY AMATEUR RADIO CLUB, INC.

VOL. LIX NO. 08 P.O. BOX 3454, TUSTIN, CA 92781-3454 August 2018

The Prez Sez.....

by Tim N6GP

I always say "Don't try to work DX during months that begin with the letter 'A'" (April and August). One of the best 6 Meter Sporadic E seasons in recent memories is now winding down. The conditions are terrible right now, but the bands are changing, and things will get better in about a month as we near the Autumnal Equinox.

There is still a dismal situation with the 11 year sunspot cycle. We hope that the sunspot cycle hits the bottom within the next 2 years. Last month we had a stretch of 3 weeks of spotless days, which is something that has not occurred since the last cycle bottom in 2009. For the year, we have had 124 spotless days, which equals 57% of the days. So for now, you can pretty much forget about 10 or 15 meters, and it is time to get ready for the Winter on 80m or 160m. I'm sure I am not alone in wishing for more real estate to put up a 160m antenna.

There was a big announcement late July in the world of the digital modes like FT8. Dr. Joe Taylor K1JT has announced plans for WSJT-X version 2.0, which has a slightly longer message format. We were able to shoehorn Field Day messages into the existing format, but WSJT-X will fully support Field Day! He is also addressing the problems in FT8 for VHF contests. This new version is slated to be released at the end of the year, in time for the ARRL RTTY Roundup and the January VHF Contest. See Joe Taylor's announcement in his white paper under "items of interest" on our website.

This month we will have Wayne Yoshida, KH6WZ, will have a thought provoking program on "Not Your Grandpa's Ham Radio". This presentation has won awards at Maker Faire's, and this would be a great meeting to bring young students to, especially ones involved in STEM (Science Technology Engineering Math). Don't forget about our big 85th Anniversary meeting next month.

73.

Tim Goeppinger N6GP
President

Next General Meeting

The August 17th 2018 OCARC General Meeting program will be presented on:

"Not Your Grandpa's Ham Radio"

By Wayne Yoshida, KH6WZ

The next General Meeting will be on:

Friday, August 17th, 2018
@ 7:00 PM

ENTER from the WEST SIDE entrance of the Red Cross Building, Room 208
Take elevator to the 2nd Floor.
See you there!

In This Issue……..Page

Orange County Amateur Radio Club
www.W6ZE.org

2018 Board of Directors:

President:
Tim Goeppinger N6GP
(714) 730-0395
N6GP@w6ze.org

Vice President:
Dan Violette
KI6X@w6ze.org

Secretary:
Jim Schultz AF6N
(714) 544-5435
AF6N@w6ze.org

Treasurer:
Ken Konechy, W6HHC
(714) 348-1636
W6HHC@w6ze.org

Membership:
Bob Eckweiler AF6C
(714) 639-5074
AF6C@w6ze.org

Activities:
Ron Mudry W6WG
(714) 840-3613
W6WG@w6ze.org

Publicity:
Tim Millard, N6TMT
(714) 744-8909
n6tmt@w6ze.org

Technical:
Kenan Reilly KR6J
(714) 277-8798
KR6J@w6ze.org

Directors-At-Large:
Clem Brzoznowski, WØMEC
(714) 927-4065
W0MEC@w6ze.org

Corey Miller KE6YHX
(714) 639-5475
KE6YHX@w6ze.org

2018 Club Appointments:

W6ZE Club License Trustee:
Bob Eckweiler, AF6C
(714) 639-5074
af6c@w6ze.org

Club Historian(s)
Corey Miller KE6YHX
(714) 639-5475
KE6YHX@w6ze.org

Bob Evans, WB6IXN (Emeritus)
(714) 543-9111
WB6IXN@w6ze.org

RF Editor – Rotating July:
Tim Millard, N6TMT
N6TMT@w6ze.org

Webmaster:
Ken Konechy W6HHC
(714) 348-1636
W6HHC@w6ze.org

Assistant Webmaster:
Bob Eckweiler, AF6C
(714) 639-5074
AF6C@w6ze.org

Tim Millard, N6TMT
(714) 744-8909
N6TMT@w6ze.org

ARRL Awards Appointees:
Arnie Shatz, N6HC
(714) 573-2965
n6hc@aol.com

John Schroeder, N6QQ
(West Orange Co.)
(562) 404-1112
n6qq@msn.com

Contact the Newsletter:
Feedback & Corrections:
rf_feedback@w6ze.org

Submit articles:
editors@w6ze.org

Monthly Events:

General Meeting:
Third Friday of the month
at 7:00 PM held at:
American Red Cross
600 Parkcenter Drive
Santa Ana, CA
(Near Tustin Ave. & 4th St.)

Club Breakfast (Board Mtg):
Normally First Saturday of month at 8am
Marie Callender's Restaurant
1821 North Grand Ave
Santa Ana, CA
(Between 17th & Santa Clara)

Club Nets (Listen for W6ZE):
28.375 ± MHz SSB
Wed- 7:30 PM - 8:30 PM
Bob AF6C, Net Control
Alt: Corey, KE6YHX, Net Control

146.55 MHz Simplex FM
Wed- 8:30 PM - 9:30 PM
Corey, KE6YHX, Net Control

7.086 ± MHz CW **OCWN**
Sun- 9:00 AM – 10 AM
Ann K6OIO, Net Control

Club Dues for 2018:
Regular Members renewals*- - - $30
Family renewal/Join**- - - - - - - - $45
New Member Join May-Jun*** **$15.00**
Replacement Badge**** - - - - - - $ 3

* Member renewals Jan-Dec.
** Two members or more, w/badge.
*** New members Jul-Sept, w/badge.
**** There is a $1.50 charge if you'd like to have your badge mailed to you.


OCARC Celebrated 85 Years
of Community Service!
ARRL
The national association for
AMATEUR RADIO
FIELD DAY
2018
ORANGE COUNTY AMATEUR RADIO CLUB
W6ZE


ORANGE COUNTY AMATEUR RADIO CLUB
W6ZE
FIELD DAY
2018

UPCOMING EVENTS

August 17th, 2018

"Not Your Grandpa's Ham Radio"

We've all participated in demonstrating ham radio to non-hams in events like Field Day or perhaps emergency communications drills. In every case, demonstration stations feature station equipment and antenna setups and operators in front of the radios. Often, the rigs and operators face away from the passers-by, and all they see are people's backs and wires and the rear panels of radios.

September 21st, 2018

"85th Anniversary & Reunion"

The Orange County Amateur radio Club was founded way back in 1933. This September we are celebrating the 85th anniversary of the club with a reunion. If you are a former member you are invited. Plans are being made. Set aside this date and join.

For the most current Upcoming event information go to the OCARC EVENTS website:
http://www.w6ze.org/Events.htm

September – 85th Anniversary and Reunion

Opportunity Drawing Request:

If you have something you would like to part with, donate it before the meeting for the Opportunity Drawing.

See Ron W6WG

OCARC –
An ARRL AFFILIATED CLUB

Save the Date – Sept. 21, 2018

Early in 1933 the Moore brothers, Earl W6IGO and Harry W6FUU, opened a radio store in Santa Ana and supported the formation of a radio club that came to be named the Orange County Amateur Radio Club. Shortly thereafter, on March 15, 1934, that club, OCARC, was granted affiliation with the American Radio Relay League.

Today, in 2018, we're celebrating our 85th year of service to the ham community and plan to gather at the September General Meeting for an 85th Anniversary Celebration including all current and former OCARC members.

Please keep the date of Friday, September 21, 2018 open and plan to meet with your old friends at our 85th Anniversary Reunion Meeting.

Meeting time – 7 pm
Meeting location – Santa Ana Red Cross Office Building, Room 208
600 Park Center Drive
Santa Ana, CA 92705
Directions including a map are available at www.w6ze.org/meetings.

RadioActivity
August 2018

Upcoming Activities:

August

- **ARRL 10 GHz and Up Contest:** 0600 Local Saturday August 18 through 2400 Local Sunday August 19.
- **North American QSO Party, SSB:** 1800 UTC Saturday August 18 through 0600 UTC Sunday August 19.
- **Run for the Bacon QRP Contest:** 0100 UTC to 0300 UTC Wednesday August 22.

September

- **ARRL September VHF Contest:** 1800 UTC Saturday August 8 through 0300 UTC Monday September 10.
- **North American Sprint, CW:** 0000 UTC to 0400 UTC Sunday September 9.

* Indicates club entries are accepted
** Indicates team entries are accepted
Note: When submitting logs for ARRL Contests indicate your club affiliation as "Orange County ARC"

State QSO Parties:

- **Maryland-DC QSO Party:** 1600 UTC Saturday August 11 through 2400 UTC Sunday August 12.
- **Hawaii QSO Party:** 0400 UTC Saturday August 25 through 0400 UTC Sunday August 27.
- **Ohio QSO Party:** 1600 UTC Saturday August 25 through 0400 UTC Sunday August 26.

Continuing Activity:

- **ARRL International Grid Chase**
  January 1, 2018 through December 2018

Repeating Activities:

- **Phone Fry** Every Tuesday night at 0230Z to 0300Z
- **SKCC** Weekend Sprintathon (Straight Key CW) on the first weekend of the month after the 6TH of the month. 1200 Sat. to 2359Z Sunday.
- **SKCC** Sprint (Straight Key CW) 0000Z to 0200Z on the 4th Tuesday night (USA) of the month.

Send an email to *Ron W6WG, w6wg@w6ze.org to have your favorite activity or your recent RadioActivity listed in next month's column.*

HQP is obviously my favorite contest.
Aloha, Ron W6WG

W6KFW - Silent Key
Christopher William Winter Jr.
27 July 1928 - 8 June 2018

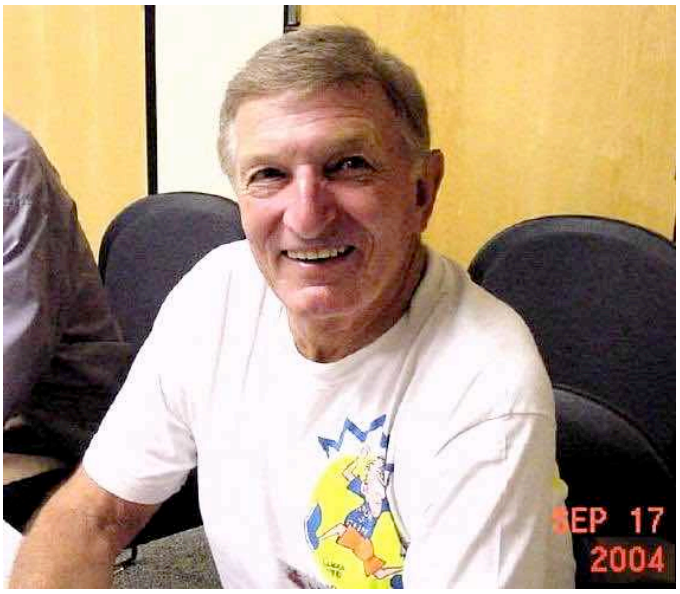

Chris at our first-ever club reunion in 2004. At that time Chris was the Membership Chairman of the OCARC.

Longtime club member Chris Winter passed away on Friday June 8th, just weeks before his 90th birthday. Chris joined the club, in the mid to late seventies. He was a co-worker and longtime friend of Art - WA6LHB (Now K7ZE).

Services were held Friday June 22nd. at Fairhaven Memorial Park, the day of Field Day setup. Unfortunately notification to the club came the evening before. Still, Bob - AF6C attended and represented the club.

Chris was a frequent board member, often as Membership Chairman, a position he enjoyed. He also held positions as Activities and TVI Chairman. Chris was very active in Field Day and occasionally took on the task of band captain. He was also an avid CW operator.

Chris joined the Navy at age 17 just missing WWII. He later also served in the US Army. In the Navy they teach you knots, and Chris often entertained club members with his rapid tying of a bowline. “When you go overboard in the North Atlantic,” he explained, “and someone throws you a line, you have just seconds to tie

Chris operating 40 meters during the 2003 Field Day.

it around your waist before the cold makes it impossible.”

Chris knew the importance of an education, and after his military service he got his high school equivalency and later added a college degree and a master’s degree in engineering, graduating with honors.

Chris, a native of Pittsburgh, Pennsylvania, was originally licensed as W3VYE. In 1960 he moved to Orange County, specifically Santa Ana, and as a result his call changed to W6KFW. Chris got a civilian job at the Navy base in El Toro at the Naval Training Device Center. There, he was involved, at an engineering level, in the design and pro-

40 meter Field Day Team. Chris W6KFW, Larry Beilin K6VDP and Stephen Samoorea KG6QVY.

gramming of aircraft and helicopter simulators. While working there he met Art, then WA6LHB, who has been a club member since the early 70's and soon Chris joined the group.

Besides Amateur Radio Chris had many other hobbies to keep him occupied. He was into running and bicycling as well as roller skating. A hobby he shared with his family. He skated competitively at the regional and national level for almost 20 years.

Chris, a devout Catholic, was also very active in his church Immaculate Heart of Mary.

In 1956 Chris married Eleanor Hughey also of Pittsburgh. Eleanor would often accompany Chris to a club function. Chris and his wife enjoyed ballroom dancing and at his service were numerous photos of them in formal ballroom attire. They made a stunning couple. Chris often talked about the dancing and his love for Lawrence Welk. Eleanor passed away in late 2014.

Chris and Eleanor were the parents of three girls. Linda, Carole and Christie. Carole and Christie live locally and Linda lives in Colorado. Chris is also survived by eight grandchildren three great-grandchildren, and a sister, Mary.

In 2007 Chris had quite a scare. He and some of his family were on a cruise off Mexico when he suffered an aneurysm. He ended up being taken ashore to a tiny hospital that is part of a strip-mall. With two patient rooms, one operating room, all one could say for it was it looked very clean. What the hospital lacked, was made up in spades by the surgeon who soon had Chris stable and able to travel back to the States where he underwent further surgery and full recovery.

Chris and Eleanor at the 2000 Christmas dinner held at Mimi's in Fountain Valley.

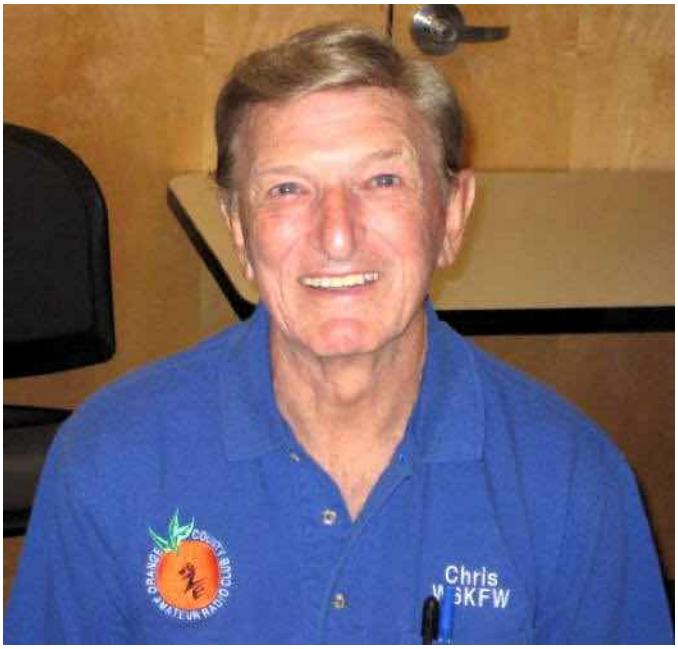

Chris at the 75th Club Anniversary Reunion in September 2008

"I had the opportunity to visit with Chris over the past year-and-a-half. Chris was moving out of his home in Santa Ana and asked me to help him get rid of some of the old electronics in his garage. I got to meet his two local daughters, Carole and Christie who were busy painting and fixing up his house for sale. He had been ill but seemed on the road to recovery. Since the visits to his Santa Ana home, I visited him a few times at his sister's house in Yorba Linda. Chris and I would sit in the shade of the garage door and enjoy the weather while we chatted. Sometimes the subject turned to math, a passion of Chris's, and I found I was rustier than him! Repairing electronics was also a topic he enjoyed. I attended his funeral representing myself as well as the OCARC. There I learned so much more about his life. I'll miss never having that next chat!" - Bob, AF6C

Heathkit of the Month #87:
by Bob Eckweiler, AF6C

ELECTRONIC TEST EQUIPMENT

Heathkit O-5 through O-8 Oscilloscopes.

Introduction:

In the June RF Newsletter the first four Heathkit Oscilloscopes were discussed; the first of which was the very first kit Heathkit offered. These four scopes were very similar in their circuitry, all using the same five tubes plus CRT (Cathode Ray Tube). In September of 1949 Heathkit updated their line with the O-5 **(Figure 1)**[1]. This kit represented a big jump in Heath's scope performance as well as being the first scope to have a real construction manual with step-by-step assembly instructions. The O-5 was followed by the O-6, the O-7 and the O-8, each being announced in the Heath September Flyer for 1950, 1951 and 1952 respectively. Each of these later models include circuit changes and frequently additional features. Heathkit often cycled kit updates in September in the early years of their business.

The Heathkit O-5:

In their September 1949 Flyer, Heathkit took a large step forward in advancing their 'O' line of scopes introducing the O-5 Oscilloscope with an ad that covered half of the front-page **(Figure 2)**. They offered more specifications than for their previous scopes, though some remained vague. The biggest improvement was the use of push-pull amplifiers for the vertical and horizontal sections. This resulted in about a 10-fold increase in vertical gain and a claimed whopping 50-fold increase in vertical frequency response. Another change was the timebase generator. It changed from a thyratron gas tube to a 6SN7 dual triode operating as a sawtooth multivibrator. Also, the CRT shield discussed in the previous article[2], that Heathkit was selling to O-2 to O-4 owners at $2.95, was now incorporated as part of the O-5 kit. The biggest surprise of the O-5 was its price. With an additional two tubes and a change of the sweep oscillator tube to a two-section triode, the extra components needed to support the new

Figure 1: Heath O-5 1950 5" Oscilloscope
Photo by Keith Greenhalgh (See Note 1)

[1] **Notes appear at the end of the article.**

Here is a link to the index of Heathkit of the Month (HotM) articles:

http://www.w6ze.org/Heathkit/Heathkit_Index.html

circuitry, as well as the CRT shield, the price remained the same as the four preceding scopes - $39.50.

The O-5 uses eight tubes including the CRT. The additional two tubes provide the push-pull function for the vertical and horizontal amplifiers. **Table I** shows the tube lineup for the O-5 through O-8 oscilloscope models.

When Heathkit announced the O-5 scope the ad also included an "O-5 Conversion Kit No. 315". This kit allowed the owners of the earlier O-3 and O-4 scopes to update their scopes to include SOME of the new features of the O-5 including the push-pull amplifiers. It did not update the sweep circuit nor did it include the CRT shield. Still, the modification kit was extensive, including a new chassis, tubes and all parts. Evidently there were actually two modification kits as Heath asked buyers to specify the scope being updated. The modification kits cost $12.50.

The O-5 Front Panel:

From afar it is hard to tell the O-5 oscilloscope from the O-4 by appearance. There are just four changes the author noted externally between the two models; all are nomenclature on the front panel. First, and most obviously, the model number, displayed just below the CRT now totes a '5'; second, the

Figure 2: Introductory ad for the O-5 Scope in the February 1949 Heathkit flyer.

O-5 to O-8 Tube Lineup

#	Function	O-5	O-6	O-7	O-8	
1.	B+ Rectifier	5Y3	5Y3	5Y3	5Y3	Full-wave diodes
2.	HV Rectifier	5Y3	5Y3	5Y3	5Y3	Parallel diodes
3.	Vertical Input Buffer	none	6J5	6J5	6J5	Triode
4.	Vertical Preamplifier	none	none	12AT7	12AT7	cascaded triodes
5.	Vertical Phase Splitter	none	none	6C4	6C4	Triode
6.	Vertical Deflection Amplifier	6SH7	6SH7	½ 12AT7	½ 12AT7	6SH7 pentode
7.	Vertical Deflection Amplifier	6SH7	6SH7	½ 12AT7	½ 12AT7	12AT7 dual triode
8.	Horizontal Phase Splitter	none	none	6C4	6C4	Triode
9.	Horizontal Deflection Amplifier	6SH7	6SH7	½ 12AT7	½ 12AT7	6SH7 pentode
10.	Horizontal Deflection Amplifier	6SH7	6SH7	½ 12AT7	½ 12AT7	12AT7 dual triode
11.	Sweep Multivibrator	½ 6SN7	6J5	½ 12AT7	½ 12AT7	All triodes
12.	Sweep Multivibrator	½ 6SN7	8J5	½ 12AT7	½ 12AT7	All triodes
13.	Cathode Ray Tube	5BP1	5BP1	5BP1	5CP1	5CP1 (PDA CRT)
14.	*Alternate CRT*	*5BP4*	*5BP4*	*5BP4*	none	
15.	*Alternate CRT*	*5GP1*	*5GP1*	*5GP1*	none	
	Total Tubes:	**8**	**10**	**10**	**10**	
	Total Tube Sections:	**11**	**12**	**16**	**16**	

Table I

words **"PUSH - PULL"** and **"EXTENDED RANGE"** appear near the top under the "***Heathkit***" logo and **"OSCILLOSCOPE"** split by the CRT. Both of these are in a small font. The third change is the **VERTICAL** and **HORIZONTAL** gain nomenclature; the O-3 and O-4 **AMP.** and **PLATES** markings are gone, reverting back to the O-2 markings, as is the ability to connect signals directly to the CRT deflection plates. The final change is the marking for the five position coarse sweep **FREQ. SELECTOR** switch which shows the new sweep ranges. A table of the sweep ranges is shown in Table II

O-5 Specifications:

Heathkit was always a little obscure in the way they gave product specifications. One has to wonder if the specifications were chosen by the advertising department instead of engineering. One example is maximum allowed input voltage to the vertical or horizontal amplifier. For the O-5 it is specified as 400 Vrms for both and then never mentioned again in the specifications or ads for the O-6 through O-8. Sometimes though, the maximum voltage is specified on the front panel.

O-5 Circuit Description:

A lot of basic circuit discussion appeared in part I² of this soon to be triumvirate, and the reader may want to peruse it before proceed-

SWEEP FREQUENCY SELECTOR RANGES

	O-5	O-6	O-7 / O-8
1.	15 - 80	15 - 80	15 - 180
2.	80 - 350	80 - 450	180 - 1800
3.	350 - 2 kc	450 - 3 kc	1800 - 12 kc
4.	2 kc - 12 kc	3 kc - 15 kc	12 kc - 100 kc
5.	12 kc - 70 kc	15 kc - 100 kc	n/a

Table II

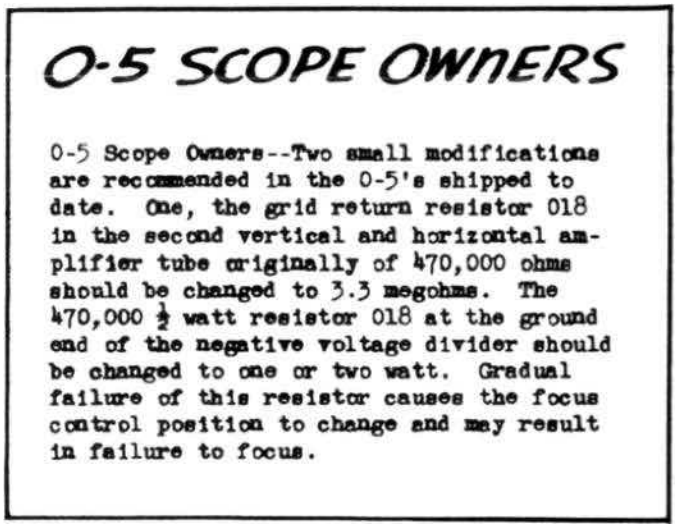

O-5 SCOPE OWNERS

0-5 Scope Owners--Two small modifications are recommended in the 0-5's shipped to date. One, the grid return resistor 018 in the second vertical and horizontal amplifier tube originally of 470,000 ohms should be changed to 3.3 megohms. The 470,000 ½ watt resistor 018 at the ground end of the negative voltage divider should be changed to one or two watt. Gradual failure of this resistor causes the focus control position to change and may result in failure to focus.

Figure 3: Early changes in the O-5 circuitry as announced in the December 1949 Heath flyer.

ing. Also the CRT workings are covered in a second article worth reading[3].

Early in the production run of the O-5 two resistor values were changed, and a bit later the wattage of another resistor was increased to prevent focusing problems. Details first appeared in the December 1949 Heath Flyer (**Figure 3**). An updated manual with the changes appeared in early January 1950.

Again, the circuitry can be divided into five areas: The B+ power supply; the HV power supply with CRT; the vertical amplifier, the horizontal amplifier and the sweep generator:

B+ Power Supply:

Voltages are given on the schematic diagram for the first time. Also there is a tube voltage chart in the manual. The B+ supply provides two voltages to the scope, +350 VDC to the vertical and horizontal amplifiers and the sweep multivibrator, and +75 VDC to the screens of the vertical and horizontal amplifier tubes as well as the V and H positioning dual-potentiometers.

In order to add features to the O-5 without raising the cost, Heathkit removed the expensive filter choke used in the earlier models and replaced it with a resistor. The current drawn by the various circuits is not heavy so this seemed like a fair trade-off for keeping the price stable. The same three-section can capacitor used in the O-4 power supply is used in the O-5.

The tube voltages given in the manual show pin 2 of the B+ 5Y3 tube (the output to the filter network) to be at 450 to 550 V which is high for the 20 µf 450 volt rated capacitor connected at that point. Assuming nominal line voltage and no transformer nor rectifier loss, the voltage would be about 495 volts if the secondary was right at 700 Vrms.

HV Power Supply and CRT:

The high voltage supply is almost identical to the O-4 HV supply. Two changes are the filter capacitor which is the last 'war-surplus' oil-filled capacitor used in the scope. It is rated for 1KV, but the voltage charts gives the voltage as "900-1300 V neg", stretching the ratings a tad. This is true of the 5Y3 rectifier tube in the HV also. However, since the tube sections are operating in parallel the plate-to-plate voltage is zero, and the tube seems to operate without problem. The second change is the final resistor in the CRT voltage chain which was changed to 100 KΩ from 1 MΩ. This is due to a new trace positioning circuit. The lower resistance caused excess dissipation on the 470 KΩ resistor in the chain so its wattage was increased as mentioned in the discussion of **Figure 3**.

Vertical / Horizontal Deflection Amplifiers:

The O-5 uses identical circuitry for the two deflection amplifiers. The biggest change for the O-5 is that the deflection amplifiers are push-pull. Instead of one deflection plate being held at a fixed voltage and the other plate voltage varied, each plate is actively driven, but 180° out of phase with each other. the result is that one plate goes more pos-

itive when the other plate goes less positive, creating a larger difference in voltage and doubling the sensitivity. Push-pull operation also has additional features. As discussed in Chuck DeVere's book "Cathode Ray Tubes"[4] push-pull operation of the deflection plates results not only in better display linearity, but also in more consistent focus over the screen area.

The deflection amplifier (see **Figure 4**) uses two 6SH7 sharp cut-off pentode tubes in cascade. The input signal is capacitively coupled through the gain control to the grid of the first stage. The plate is capacitively coupled to one of the deflection plates. The screen grid is connected to the 75V B+ supply through a 5.6 KΩ resistor. The amplified signal is also present at the un-bypassed screen grid and is coupled to the control grid of the second amplifier tube. The second tube has its plate coupled to the other deflection plate. Due to the phase shift in the tube, this signal is 180° out of phase with the signal to the other deflection plate. The main problem with this cascaded push-pull type of circuit is the signals at the two plates, while correctly out of phase, are not quite identical in amplitude. This preempts directly coupling the tube plates to the deflection plates as the different amplitudes would also cause the trace position to change. Thus, on the O-5, a separate high impedance DC voltage is directly coupled to the deflection plates to set the trace position. This requires coupled dual potentiometers for each position control.

Sweep Circuit:

The O-5 sweep circuit is an improvement on the earlier circuit that uses an 884 thyratron gas tube. The new circuit is a multivibrator using a dual triode 6SN7. This circuit continued to be used through the O-9, with minor component changes; however, different tubes were used, probably driven more by inventory than engineering.

The basic multivibrator circuit is shown in **Figure 5**. Let's follow it through one cycle starting where V1A has just turned on. CA,

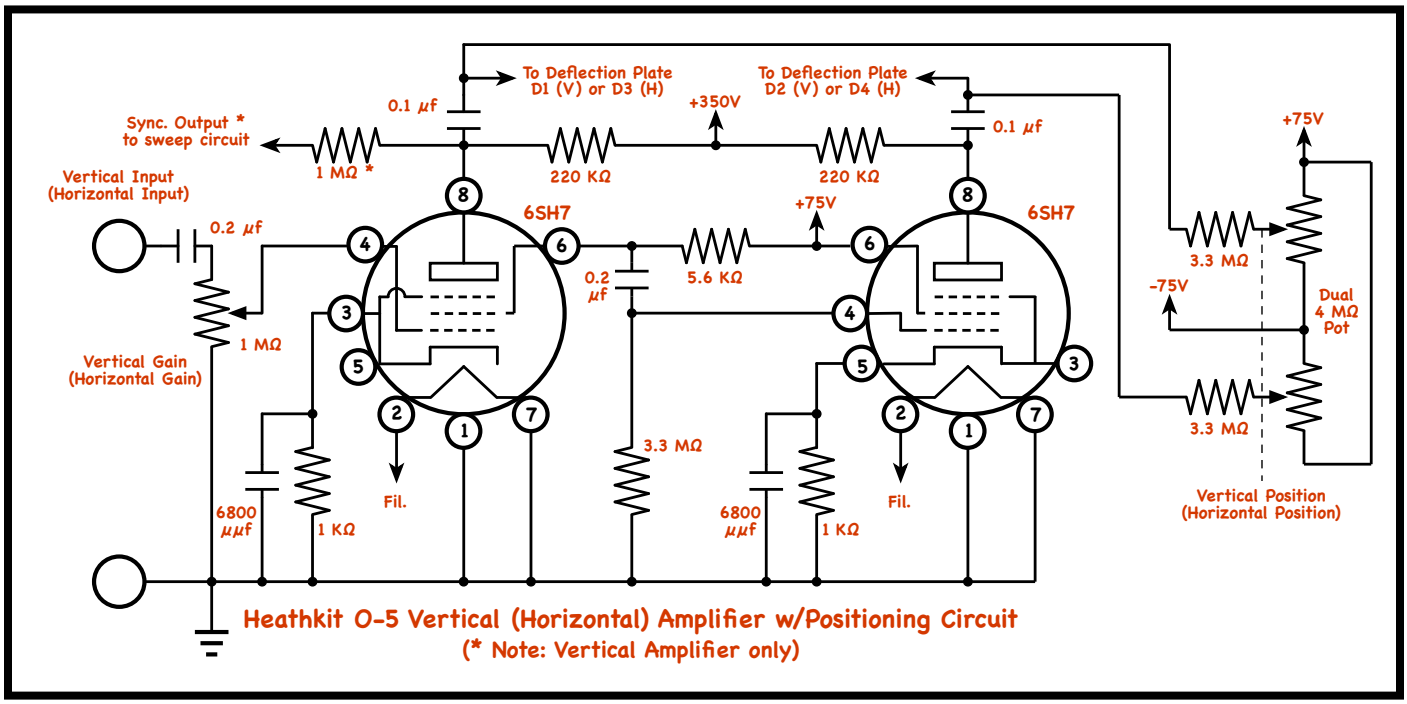

Figure 4: O-5 Vertical Cascading Push - Pull Deflection Amplifier (Horizontal amplifier is identical).

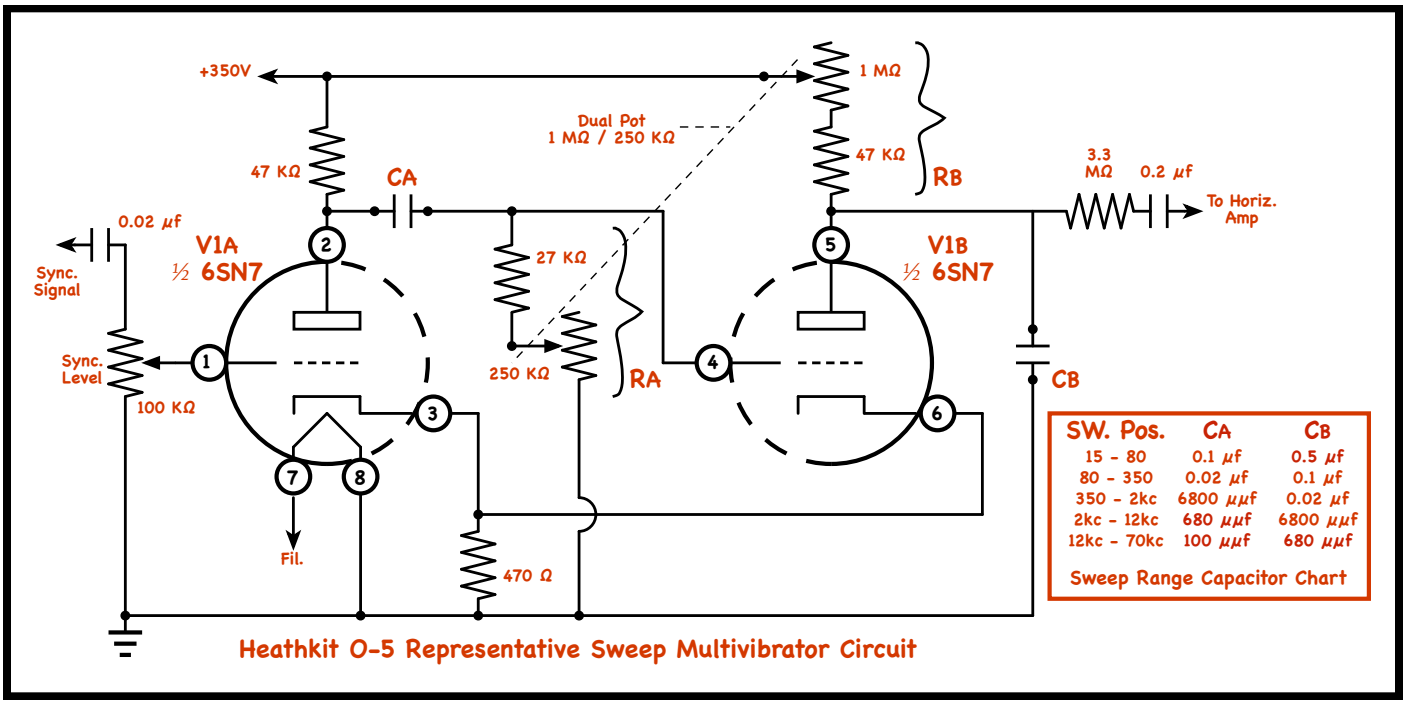

Figure 5: O-5 Representative Sweep Multivibrator Circuit. (The O-6 through 0-9 circuits are similar, but not identical)

which had charged while V1A was off, discharges through the tube and RA, applying a negative grid voltage to the V1B turning it off. CB starts to charge through RB. When CA has discharged sufficiently, V1B begins to conduct causing CB to discharge through the tube and cathode resistor which turns V1A off. CA immediately starts charging through RA. As CA charges grid voltage on pin 4 drops finally turning V1B off which removes the cathode bias on V1A turning it back on and completing the cycle. Thus CB charges slowly through RB and discharges rapidly through V1B producing a sawtooth voltage that is fed to the horizontal amplifier when in sweep mode. Since the charge discharge voltage of CB is only a small fraction of the 350 volt B+, the sweep ramp is very nearly linear.

A large positive pulse on the sync input turns V1A on if it was off, forcing the sweep oscillator to sync at the frequency, or subharmonic of the frequency, of the sync pulses. When internal sync is selected these pulses come from the vertical amplifier signal.

The Heathkit O-6:

The O-6 was announced in the September 1950 Heath Flyer. Featured in the flyer were twelve improvements that were made in the new oscilloscope. Four of these improvements involve the amplifiers, two the sweep and sync circuits, two the CRT and associated circuit, two the new vertical attenuator and the last two the power supply. These will be touched on in the circuit descriptions.

The O-6 Front Panel:

Figure 6 shows the front panel of the O-6. Two changes stand out: Another control has been added to the front panel as has a binding post to the right and between the horizontal position and gain control. The added control is a switch that controls the new vertical attenuator. This **VERT. INPUT** two-position switch selects either x100 attenuation (**600 VOLT MAX.**), or x1 attenuation (**10 VOLT MAX.**). The added binding post is marked **DC** and allows direct DC input to the horizontal amplifier, which is DC coupled to the deflection plates.

Figure 6: Heath O-6 1951 5" Oscilloscope Photo by Keith Greenhalgh (See Note 1)

The O-6 Specifications:

Table III covers the O-6 specifications. Notable is that the sensitivity of the vertical amplifier actually decreased some from the previous model, as did the frequency response. This is one of the rare scopes that has a lower vertical sensitivity than horizontal.

The O-6 Circuit Description:

Among the twelve improvements toted in the O-6 ads is this statement (#3 of 12): *"Both vertical and horizontal amplifiers use push-pull pentodes for maximum gain."* However, that is true of the O-5 also; actually all the previous scopes also use pentodes, though not in the push-pull configuration. Interestingly, this is the last 'O'-series scope to use pentodes in the amplifiers. Let's briefly look at the changes:

O-6 B+ Power Supply:

A new heavy duty magnetically shielded transformer is introduced in the O-6 (#12 of 12) as is a four-section filter capacitor allowing the horizontal and vertical amplifier screens to be isolated from each other (#11 of 12). A single B+ voltage of 350 volts is used throughout the scope.

O-6 HV Supply and CRT:

For the first time the accelerating anode of the CRT is brought above ground to around +125 VDC resulting in a brighter display (#6 of 12). An improved *Allegheny Ludlum* CRT shield is also supplied (#1 of 12). Other than that the HV remains pretty much the same except the high voltage resistor chain was adjusted for the higher acceleration voltage and for no longer needing a negative voltage for the balance circuits. Also the HV filter capacitor was changed to 0.25 µf (or 0.5 µf in some instances) 1500 V.

O-6 Vertical Attenuator:

New to the O-series scopes is a two step attenuator (#9 of 12) with cathode follower. It precedes the vertical amplifier. In the x1 position the input is terminated by a 3.3 MΩ resistor to ground. In the x100 position a frequency compensated voltage divider is switched in. This attenuator consists of two resistors in series, the upper one being 3.3 MΩ and the lower one being 101 times smaller (about 32.7 KΩ)[5]. For frequency compensation the lower resistor is shunted by 680 µµf, and the upper resistor by a capacitance 101 times smaller (actually this is a small trimmer capacitor for adjustment). The signal is fed to the top of the upper resistor, the junction of the two resistors is connected to the cathode follower and the bottom of the lower resistor is ground (see O-7 discussion).

The cathode follower uses a 6J5 triode and provides the needed high impedance to the output of the attenuator. The output of the cathode follower is AC coupled through the vertical gain control at a low impedance point to the push-pull deflection amplifier. (#10 of 12)

O-6 Vertical/Horizontal Deflection Amplifiers:

Like the O-5, the O-6 uses identical circuits for the two deflection amplifiers. However, the circuit is improved. Instead of cascading amplifiers, the first driving the second, a differential amplifier is used. This offers a lot of advantages. First, the tube plates are directly connected to the CRT deflection plates (#4 of 12), second, the balance control is a simple pot in the cathode circuit adjusting the quiescent current in each tube and hence the deflection voltages. The only capacitor in the circuit buffers the position potentiometer, hence the circuit can operate from DC to a high frequency (#4 of 12).

The differential amplifier circuit is shown in **Figure 7**. With no input, the grid of each tube is at ground, and an equal current from each tube flows through the common cathode resistor (with the position pot centered). Since each plate is drawing the same current, the drop across the 220 KΩ load resistors are identical and the voltage on the deflection plates are identical. When a signal causes the input to go positive, current increases in V1. Since the cathodes share the same resistor the increase in cathode voltage causes V2 to reduce its current keeping the cathode current constant. Thus for the vertical amplifier, the D1 deflection plate (upper) becomes less positive and D2 (lower becomes less positive) deflecting the CRT beam up. When the input signal goes negative the reverse happens and the CRT beam is driven down. The horizontal deflection amplifier works similarly. The high gain of the differential amplifier produces a sensitivity of around 0.04 Vrms for one inch of deflection. While this number holds for the horizontal amplifier, the attenuator circuit and cathode follower section reduce the vertical sensitivity to 0.09 Vrms (#5 of 12).

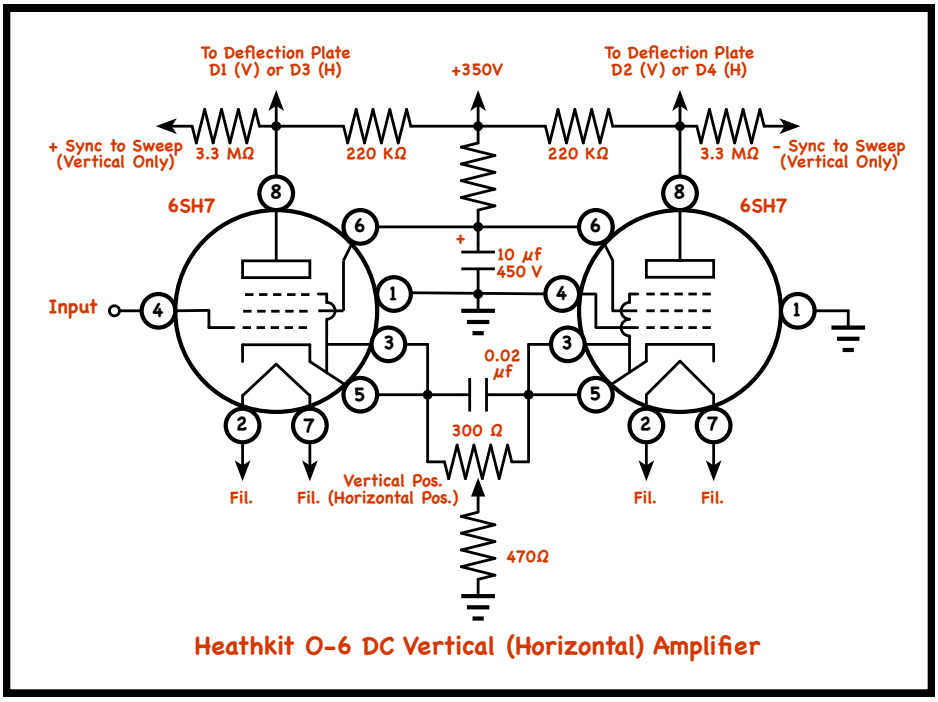

Figure 7: O-6 Deflection Amplifier

A binding post on the front panel named DC is DC coupled through the horizontal gain pot to the horizontal amplifier input, allowing DC input to the horizontal amplifier. (#2 of 12). Evidently Heath added this as a last minute thought. Some early ad photos show the O-6 without the binding post.

O-6 Sweep and Sync Circuit:

The sweep circuit is very similar to the O-5 circuit. For reasons unknown, the 6SN7 was changed to two separate 6J5 triodes, and new frequency determining components were

chosen to increase the five ranges of the sweep multivibrator to cover 15 cps. to 100 kc. (#7 of 12).

Thanks to the differential amplifier it is possible to obtain sync pulses from each plate of the vertical amplifier. One can be used for positive syncing and the other for negative syncing. The signals from each plate are isolated with 3.3 MΩ resistors and AC coupled to an end of the **SYNCHRONIZING** center tapped potentiometer. The center-tap is grounded and over one half of the rotation positive syncing is available and over the other half negative syncing is available (#8 of 12). Heathkit continued to use the same center-tapped sync circuit through the O-9.

The Heathkit O-7:

The New 1952 Heathkit O-7 Oscilloscope kit was announced in the September 1951 Heath Flyer. It was the first of the 'O'-scopes to use miniature 7 and 9 pin tubes. No more "high-gain pentode" claims; other than the rectifiers and CRT, all the tubes are triodes. Instead of trying to get the gain from one tube, four triode stages precede the vertical deflection amplifier. The O-7 also adds an astigmatism control. It is a set-and-forget pot that adjusts the circularity of the dot. To help increase bandwidth, the deflection amplifier and phase splitter tubes now reside on the rear CRT support to keep the lead capacitance to a minimum. Another nice feature is the sweep vernier control. The sections of this dual pot are coupled so they can turn independently over a few degrees of rotation before following each other. This allows one to turn the control to just past the desired point, moving both sections, and then go backwards moving just the fine pot, making adjustment easier.

These improvements finally "broke the bank" and for the first time since the O-1 Heath raised the scope price by 10% to $43.50.

The O-7 Front Panel:

Figure 8 shows the front panel of the O-7. The **INTENSITY** and **FOCUS** controls have been moved to the top, and the **VERTICAL CENTERING** and **HORIZONTAL CENTERING** controls have replaced them. The **VERT. GAIN** and **HORIZ. GAIN** controls have been moved to where the position controls were. The **VERT. INPUT** (attenuator) switch has been moved to the former VERT. GAIN position and the **SYNCHRONIZING** pot to the former HORIZ. GAIN position. The short-lived DC binding post is gone. Along the bot-

Figure 8: Heath O-7 1952 5" Oscilloscope
Photo by Keith Greenhalgh (See Note 1)

tom the two rows of slide switches, binding posts and pilot light remain as they have been since the O-2 with the exception of the switches changing from toggle to slide switches during the O-3 production.

The O-7 Specifications:

Table III covers the O-7 specifications. Notable is that the sensitivity of the vertical amplifier increases to 0.03 Vrms per inch of deflection, the less critical horizontal amplifier drops way down to 0.6 Vrms. For the first time Heath actually specifies quantitative data for the frequency response as: +2 db at 10 cps and -24 db 2 MHz (1 kc ref.). They also say the scope is usable up to 5 mc.

O-7 Circuit Description:

The O-7 is the first O-scope to use the new Heathkit parts number system. This makes it difficult to determine if a part is new or not. Again, let's look at the circuit one section at a time:

O-7 B+ Power Supply:

The ads refer to a 'special', but not 'new' transformer with reduced magnet and electrostatic fields, internal shield with ground lead. This is probably the same part as used in the O-6, and it must have worked well because the O-7 no longer comes with a CRT shield. The B+ uses the same four-section capacitor, but now producing three B+ voltages, +350 V and two lower unspecified voltages. These two lower voltages supply power to the two phase splitters, everything else is powered by the +350 volts.

O-7 HV Supply and CRT:

The HV filter capacitor was changed back to 1 µf oil-filled, but the HV CRT resistor chain remains the same except the astigmatism control replaces two of the fixed resistors with the wiper going to the CRT acceleration electrode.

O-7 Vertical Attenuator:

Figure 9 is a schematic of the O-7 attenuator it is identical to the O-6 attenuator except for a couple of values. While the O-6 provides an attenuation of 100:1, the O-7 attenuator has an attenuation of 70:1. A cathode follower with a gain less than one, but a high input impedance to isolate the attenuator, and a low output impedance to prevent distortion in the vertical gain control, follows the attenuator.

O-7 Vertical/Horizontal Deflection Amplifiers:

The vertical and horizontal deflection amplifiers both use a 12AT7 dual triode to directly drive the CRT deflection plates. However, the vertical amplifier has two stages of triode pre-amplification, also using a 12AT7, prior to the deflection amplifier. Each of the deflection amplifiers use a phase splitter to provide 0° and 180° to the two amplifiers driving the CRT deflection plates. The vertical circuit uses a 6C4 seven-pin miniature triode while the horizontal circuit uses a 6J5 octal triode. The O-8 is almost identical and further discussion will be waived till then.

O-7 Sweep and Sync Circuit:

The sweep circuit is the same multivibrator circuit discussed for the O-5 with minor changes. The O-7 uses a 12AT7 miniature tri-

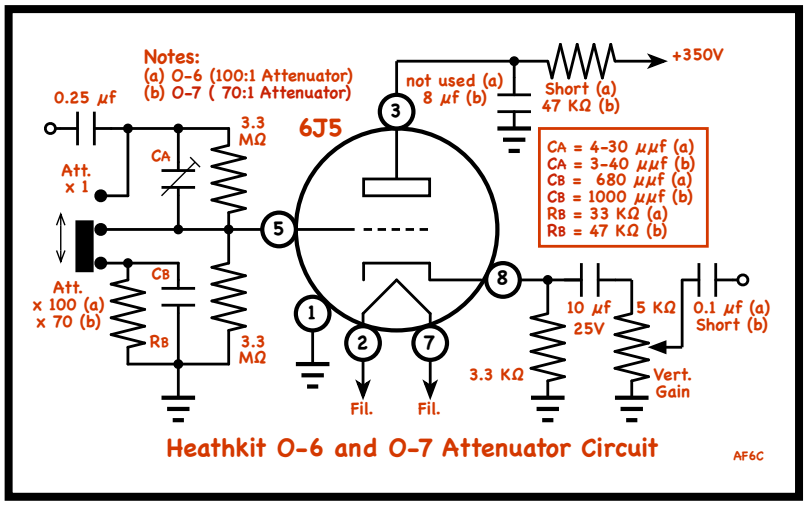

Figure 9: O-6 and O-7 Attenuator Circuit

ode and the sweep range switch now has only four ranges. (see table II), however the new sweep vernier control makes adjustment easy. One Heath ad claims the sweep is capable of going as high as 135 kc. Positive and negative sync pulses are now taken from the vertical phase splitter outputs.

The Heathkit O-8:

The September 1952 Heath flyer is missing from the author's collection, however a check of the September 1952 issue of Radio News. included the "New Heathkit Oscilloscope Kit; Model O-8". By then Heath and Heathkit were well established; the Radio News ad ran for 11 pages and included 47 Heathkit items on the order form. Chuck Penson sent a page from the October 1952 Heath flyer **(Figure 10)** which is likely identical to the September flyer ad.

The O-8 came out with a new style. For the first time there are ventilation holes in the cabinet along the top and bottom on each side. Also the cabinet is formed with rounded corners and a formed front panel. The maroon pin-striping around the front panel is gone, and Heathkit introduced its new 5-way binding posts (See **Figure 11**). Probably the most significant change is a new PDA CRT,

Figure 10: O-8 Oscilloscope ad from the October 1952 Heathkit Flyer, courtesy of Chuck Penson - WA7ZZE

Figure 11: Heath was so proud of their new 5-way binding post they offered them separately in packs of 10 pairs for many years (1953-54 Winter Flyer Ad).

the 5CP1. PDA, as explained in the CRT article[3], stands for Post Deflection Anode. The faster the beam passes between the deflection plates the more voltage is needed to deflect the beam the same amount. By accelerating the beam after deflection a much brighter spot is possible without compromising sensitivity.

The O-8 Front Panel:

Figure 12 shows the front panel of the O-8. Note the change in style from the earlier scopes. Chuck Penson refers to this style as Late Pre-Classic[6]. The control layout is identical to the O-7 with the single difference being the attenuator now has three positions. The FREQ. VERNER potentiometer is the same specially coupled dual one used in the O-7, allowing good vernier action.

The O-8 Specifications:

The O-8 specifications are shown in Table III. The vertical amplifier sensitivity has increased by 20%, and direct access to the deflection plates is available again (for the first time in a push-pull scope); but now the connections are made to a terminal strip behind a removable plate at the rear of the scope. Heath also continued to refine the frequency response specifications, giving ±2 db and ±6 db ranges.

O-8 Circuit Description:

The O-8 circuit is very close to the O-7; for the first time, since the O-1, peaking coils are used on the vertical amplifier. They will continue to be used through the O-12. The other big (but very simple) change is the PDA CRT circuitry that is covered in the HV section.

Figure 12: Heath O-8 1953 5" Oscilloscope Photo by Keith Greenhalgh (See Note 1)

O-8 B+ Power Supply:

The O-8 B+ power supply is identical to the O-7 with the exception that it uses a new power transformer. The B+ windings, however, remain the same.

O-8 HV Supply and CRT:

The new transformer's HV winding current has been increased from 3 mA to 5 mA to supply the extra beam current due to the PDA. With the new 5CP1 CRT, the HV divider chain has had its resistor values tweaked some to provide the proper intensity and focus voltage ranges. The astigmatism (spot shape) control remains. The PDA is powered directly from +400 volt B+.

Heath provided an optional "Intensifier Kit" for the O-8 for an additional $7.50. This kit increases the overall acceleration voltage from around 1.4 KV to 2.2 KV. No information has been found by the author on this accessory kit[7], however it appears to add a voltage doubler off the B+ supply using a HV selenium rectifier and additional filter capacitor to increase the PDA voltage to around +800 volts. This results is a much brighter spot, especially at the faster sweep rates.

O-8 Vertical Attenuator:

Heath improved on the O-6 and O-7 attenuator by adding a third attenuation. The O-8 offers x1, x10 and x100 attenuation.

O-8 Vertical/Horizontal Deflection Amplifiers:

The vertical and horizontal amplifiers are almost identical to the O-7. Figure 13 is a schematic of the O-8 vertical amplifier including the cascaded preamplifier and phase splitter.The only difference between the O-7

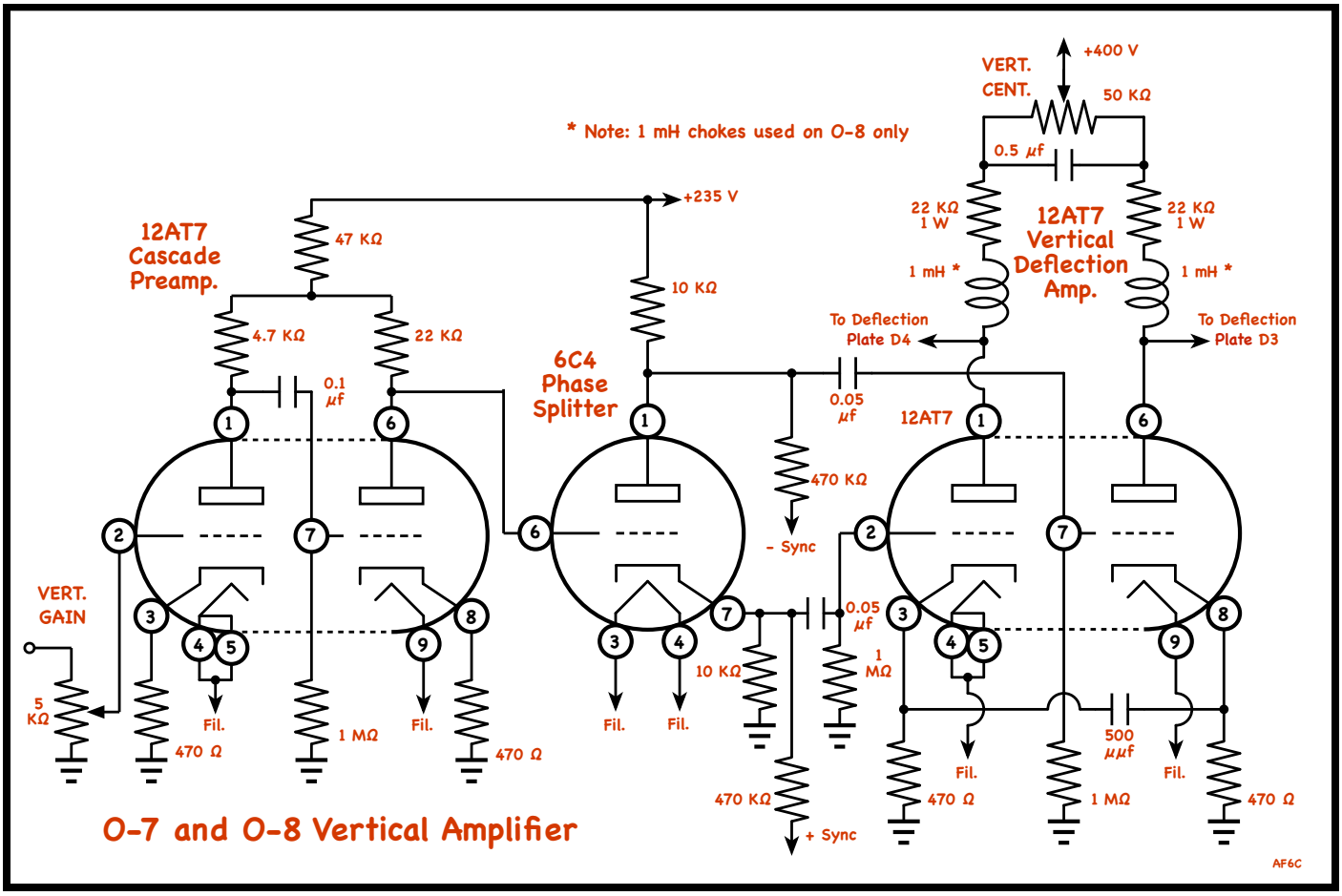

Figure 13: O-7 / O-8 Oscilloscope Vertical amplifier

and O-8 is the addition of peaking coils in the plate circuit of the deflection amplifier for added frequency response. The phase splitter has equal resistances in the plate and cathode circuit and the signal amplitude appearing across them are identical but 180° out of phase. These two signals each drive a section of the deflection amplifier. They also provide sync signals to the sweep circuit. Either may be selected by the sync pot to allow syncing on positive or negative waveforms.

The horizontal amplifier doesn't have the preamplifier, and it has a different phase splitter circuit (**Figure 14**). To provide a horizontal gain control Heath uses a dual-5 KΩ potentiometer that adjusts the gain of each phase of the signals going to the horizontal deflection amplifier. The horizontal deflection amplifier is identical to the vertical circuit with two exceptions, first there are no peaking coils, and second, the tube sections are reversed, probably to reduce lead length.

Figure 15 shows the rear of an uncased O-8. Note the four miniature tube sockets on the vertical CRT support. The single tube socket on the left is the horizontal deflection amplifier. Its 6J5 phase splitter is on the main chassis. The three tube sockets on the right are (from bottom to top) the preamplifier, the 6C4 phase splitter, and the vertical deflection amplifier. The two peaking coils are the brown components located below, and partially behind, the large screw-type terminal strip. this terminal strip is available behind a metal plate on the rear of the scope and allows direct connection to the CRT plates.

<u>O-8 Sweep and Sync Circuit</u>:

This circuit is identical to the O-7. Refer to the O-7 section for details.

Summary:

A lot of ground has been covered in this article. There remain four more O-series scopes

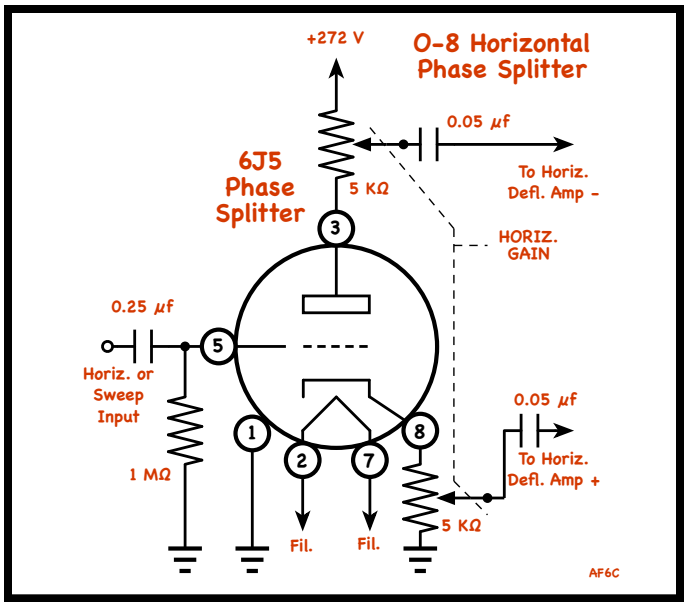

Figure 14: The O-7 and O-8 use a different phase-splitter for the horizontal amplifier than is used in the vertical amplifier.

that Heathkit sold. The third part of this trilogy is still a few months off. Meanwhile we'll touch on some other kits, and hopefully shorter articles!

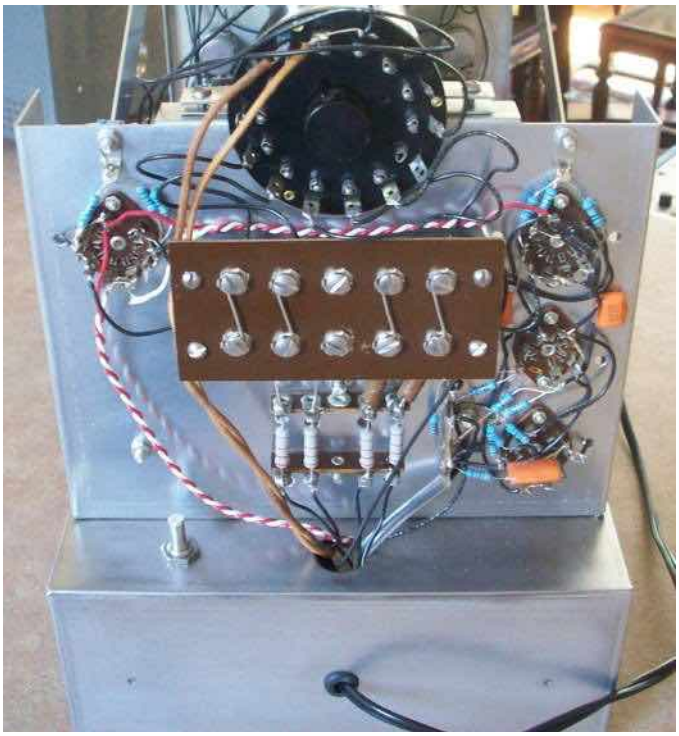

Figure 12: O-8 rear view showing CRT socket and terminals for deflection plate access. Photo by Keith Greenhalgh (See Note 1)

Specification	O-5	O-6	O-7	O-8
Announced Date: Discontinued Date:	September 1949 August 1950	September 1950 August 1951	September 1951 August 1952	September 1952 August 1953
VERTICAL AMPLIFIER	Push - Pull	Push - Pull	Push - Pull	Push - Pull
Input Impedance	1 MΩ	3.3 MΩ / 35μμf	2 MΩ / 30μμf	2 MΩ / 47μμf (x1) 2 MΩ / 35μμf (x10/x100)
Sensitivity (volts per inch)	0.06 Vrms	0.09 Vrms	0.03 Vrms	0.025 Vrms @ 1kc
Maximum Input Voltage	400 Vrms	(x100) 600 V, (x1) 10 V	(x70) 400 V, (x1) 6 V	(x100/x10) ?, (x1) 5 V
Freq. Response.	Useful to 2.5 MHz (at maximum gain)	Useful to 2 MHz	+2 db / 10 cps -24 db 2 MHz (1kc ref.)	±2 db 10 cps to 1 mc ±6 db 5 cps to 2 mc
Attenuator	none	x1 / x100	x1 / x70 (b)	x1 / x10 / x100
HORIZONTAL AMPLIFIER	Push - Pull	Push - Pull (w/DC input)	Push - Pull	Push - Pull
Input Impedance	1 MΩ	250 KΩ / 50μμf	2 MΩ / 30μμf	1 MΩ / 25μμf
Sensitivity (volts per inch)	0.06 Vrms	0.04 Vrms	0.6 Vrms @ 1kc	0.6 Vrms @ 1kc
Freq. Response H Amp.	Useful to 2.5 mc (at maximum gain)	Useful to 2 MHz	+2 db at 10 cps -12 db / 2 mc (1 kc ref.)	± 6 db 10 cps to 1 mc
SWEEP CIRCUIT	Multivibrator	Multivibrator	Multivibrator	Multivibrator
Horizontal Sweep Range	15 cps to 70 kc	15 cps to 100 kc	15 cps to 100 kc (c)	15 cps to 100 kc
Range Switch Positions	5	5	4	4
60-cycle Test Voltage Post	Yes	Yes	Yes	Yes
SYNCHRONIZATION	From Vert. amp plate	from vertical channel	from vertical channel	from phase splitter
External Input	Yes	Yes	Yes	Yes
Sync. Polarity	Positive only	Positive & Negative	Positive & Negative	Positive & Negative
Power - 50/60 cps	105/120 VAC 60 W	105/125 VAC 60 W	105/125 VAC 70 W	105/125 VAC 70 W
Fuse	Dual @ 1 amp (internal)	One @1 amp (internal)	One @ 1½ amp (internal)	One @ 1½ amp (internal)
Electrostatic CRT Shield	Yes	Yes - Improved type	No	No
Astigmatism (spot) Control	No	No	Yes	Yes
Direct Input to CRT Deflection Plates	No	No	No	Yes
'Z' Intensity Modulation Input	Yes	Yes	Yes	Yes
Size H" x W" x D"	13 x 8-1/2 x 17	13 x 8-1/2 x 17	13 x 8-1/2 x 17	14-1/8 x 8-5/8 x 18
Shipping Weight (lb.)	25 (a)	30	29 (a)	29
Price US$	$39.50	$39.50	$43.50	$43.50
COLOR KEY:	From manual specs.	From flyer ads	From scope photos or schematic	

Table III: Heathkit O-5 through O-8 Specifications (Table notes on next page)

As time permits a page will show up on the Heath of the Month website with links to a short pdf with each kit's schematic, parts list, specifications and introductory ad when available. Parts lists for the O-1 and O-2 have not been found, nor have any specifications other than that found in ads. If you have any of this information please get in touch using the link at the end of this article.

Acknowledgements:

Obtaining information on twelve different Heathkit oscilloscopes, only one of which I own, seemed a daunting task. Luckily I had help, especially from the following people:

Chuck Penson - WA7ZZE, who is the author of three Heathkit books; *Heathkit - A guide to the Amateur Radio Products*; *Heathkit Test Equipment Products*; and his new book *Heathkit Hi-Fi and Stereo Products*. Chuck supplied me with schematics, specifications, ads from old Heathkit flyers and more.

Keith Greenhalgh, a collector and restorer of many electronic products, who has a large album of excellent high resolution photos of his equipment in and out of the cabinet on Flickr. Many photos include details that helped fill in a lot of questions I had on the Heath O-series kits. Keith has graciously allowed me to use his pictures in this article.

No topic for next month has been set yet. However I hope do a short book review on Chuck's new Heathkit Hi-Fi book.

73, from AF6C

Specification Notes:

(a) 24 lb. in early ads.

(b) calculated - attenuation ratio not given.

(c) sweep up to 135 kc. claimed in Sept. 51 flyer ad.

(d) obtained from schematic and/or front panel text.

Notes:

1. Keith Greenhalgh has an extensive photo album of electronic hi-fi and test equipment on Flickr, many of them Heathkits. You can reach his albums here: https://www.flickr.com/photos/keithgreenhalgh/albums
2. http://www.w6ze.org/Heathkit/Heathkit_Index.html HOM #85 article (From ***RF Newsletter*** June 2018)
3. The 5BP1 CRT and others are discussed in detail in ***Bob's TechTalk*** article #51 published in the May 2018 ***RF Newsletter*** and available right below the article linked to in the preceding note.
4. Chuck DeVere's book ***Cathode Ray Tubes*** part of the Tektronix library is available on line at: http://w140.com/tekwiki/images/6/62/062-0852-01.pdf
5. The 33 KΩ resistor is in parallel with the 3.3 MΩ resulting in 32.7 KΩ.
6. ***Heathkit Test Equipment Products*** by Chuck Penson WA7ZZE, 2014 ISBN978-0-615-99133-7 page iv.
7. The "Intensifier Kit" is mentioned briefly in the October 1952 flyer (Figure 10).

Remember, if you are getting rid of any old Heathkit Manuals or Catalogs or flyers, please pass them along to me for my research.

Thanks - AF6C

OCARC
BOARD MEETING MINUTES
August 4, 2018

The August OCARC Board meeting was held at the Marie Callender's Restaurant at 1821 N. Grand Ave in Santa Ana on August 4, 2018. Meeting called to order at 8:09 am with a quorum.

Roll Call:

President: Tim N6GP, Present
Vice President: Dan KI6X, Present
Secretary: Jim AF6N, Present
Membership: Bob AF6C, Present
Technical: Kenan KR6J, Present
Treasurer: Ken W6HHC, Present
Activities: Ron W6WG, Present
Publicity: Tim, N6TMT, Present
Directors at Large:
Corey KE6YHX, Present
Clem W0MEC, Present

DIRECTOR REPORTS:

Vice President Report deferred to Old Business.

Secretary: Secretary of State's Certification of our OCARC Statement of Information as received from the State was presented for the Treasurer's record.

Membership: Bob, AF6C reported the current OCARC roster is complete and posted on the website. No new members or applications have been received during the past month. Current membership remains at 80.

Technical: No current report.

Treasurer: Ken, W6HHC presented the Year to Date Cash Flow report. Current bank balance is $6,851. See the attached Cash Flow report.

Activities: Ron, W6WG deferred his report for New Business.

Publicity: Tim, N6TMT reported restocking OCARC flyers at HRO.

Director at Large: Clem, W0MEC reported that the last 2M net was well attended with good copy. However, the 10M net conditions were poor with both QRN and poor propagation.

Director at Large: Corey, KE6YHX reported completion of his Lifetime Achievement archive search. He has assembled a great report suitable for an anniversary presentation and complete with a collection of significant photos from the OCARC history.

He also noted that the new 80M net did not meet this week due to roof construction at his QTH.

OLD BUSINESS:

Newsletter Editors: Upcoming RF Newsletter Rotating Editors will be:

Tim, N6GP will edit for September.
Jim, AF6N volunteered for October.
Kenan, KR6J volunteered for November.

Programs: Dan, KI6X reported the following programs:

Wayne Yoshida, KH6WZ
"Not Your Grandpa's Ham Radio"
August 17th, 2018

September 21st, 2018
85th OCARC Anniversary, Reunion, Festivities
Carl Gardenias, WU6D will speak in behalf of ARRL.

October 19th, 2018
OCARC AUCTION and excitement

November 16th, 2018
John Stanford, KF6I
"High Voltage Apparatus"

December 7th, 2018 (in the planning)
OCARC Holiday Dinner (Mimi's – Tustin)

January 18th, 2019
Arnie Shatz, N6HC
"Baker Island DXpedition"

85th Anniversary: Jim, AF6N reported 14 Anniversary Mugs sold to date. He received a written quote from Personalization Mall agreeing to supply "up to 36" 15oz mugs as we specified at a cost consistent with our $14.00 selling price. It was suggested that we order approximately 30 mugs in order to allow for gift thank you mugs to future speakers.

Jim suggested an email blast in mid-August as an Anniversary reminder. The email would include attachments including the prior "Save the Date" and the Anniversary Mug Order Form as well as a request to guests interested in a SKYPE contact.

Tim N6GP will email invitations to the Mobile Rig Show participants.

Ron W6WG will order a full sheet cake decorated with the OCARC QSL.

A motion was approved to purchase a plaque not to exceed $100 for presentation to our Lifetime Achievement Award recipient. Tim N6GP will follow up.

EMCOMM Update: Bob AF6C reports that work continues on an update of the RF webpage.

Field Day Tower Plate: All agreed that the 2nd tower plate should be reinforced. Atlee of Datum Control will be approached for the reinforcement work.

Holiday Banquet: Ron W6WG reported that he has confirmed a December 7 reservation with Mimi's Café for their large room. The small room that we previously used was booked prior to our request. A group consisting of Ron W6WG, Ken W6HHC, and Nicholas AF6CF will visit Mimi's to confirm the suitability of the larger room.

NEW BUSINESS:

October Activities: Ron, W6WG suggested that we again hold a combined Board Meeting/Picnic with California QSO participation at the Jeffery Free Trail site. All agreed. We hope that non-attending members will participate from home QTHs and combine their results with the W6ZE results.

Nominating Committee: A nominating committee for the 2019 Board was named and includes: Tim, N6GP, Tim, N6TMT, Ron, W6WG, and Bob, AF6C.

FOR THE GOOD OF THE CLUB:

Nicholas, AF6CF reported an enjoyable afternoon on Echo Link working South American stations including one operating mobile and one portable on a hand held..

Nicholas also suggested a possible opportunity drawing in conjunction with other clubs.

Bob, AF6C reported meeting Chuck Penson, WA7ZZE for dinner. Chuck authors extensively on Heathkit history and equipment. He hopes to release another book soon. Bob's own Heathkit writing has been acknowledged and referenced by Chuck.

Ron, W6WG suggested a future presentation on "Computer to Rig Interfacing for Dummies". Com porting problems face many members. And, problems frequently seem to result from Windows 10 updates.

Tim, N6GP reported winning the Bioenno 12 AH battery at the HRO Ham Jam.

A discussion of W6ZE and W6NGO trusteeship combination took place. Rules research will follow.

Tim, N6TMT reported working and confirming QSO with Tac, JA7QVI on **6M FT8** mode.

Bruce Nolan, N0BRU was welcomed as our guest and invited to join OCARC. He comes to us from the Miami, Florida and has background in maritime and aircraft communication.

A motion was passed to **move the September Board Meeting date to September 8** to avoid conflict with Labor Day weekend.

The meeting adjourned at 9:47 am.

Submitted by:

Jim Schultz AF6N
OCARC Secretary

OCARC
GENERAL MEETING MINUTES
July 20, 2018

The July OCARC General meeting was held at the Santa Ana Red Cross Complex on July 20, 2018.

Club Officers:
There was a quorum. All officers were present except Ron, W6WG and Kenan KR6J.

Attendance:
Present were 22 members, 8 guests, and our 2 evening speakers, Carl Gardenias WU6D and Ken Bourne, W6HK.

The meeting was called to order at 7:07 pm and was followed by the Pledge of Allegiance to the Flag and introductions of the members and guests.

Tim N6GP thanked all for their attendance and welcomed Arnie, N6HC back from a successful DXpedition to Baker Island.

July Program:

ARES (Amateur Radio Emergency Service):
Dan, KI6X introduced our first speaker of the evening Carl Gardenias, WU6D. Carl and Cathy, K6VC are proud Life ARRL members, and longtime residents of Perris CA.

Carl has served ARRL and the Southern California ham radio community continuously since coming to California. He has been elected and appointed to many ARRL positions while also being heavily involved in our community groups such as the Boy Scouts, Indian Princesses, Southern California DX Club, and various ham activities. He has served as ARRL Orange Section Manager since 2003.

Carl's background is extensive beginning with his first ham ticket in 1969. While serving in the Air Force and various private enterprises he operated from several U.S. states and countries around the world. Carl is now retired from the US Air Force and also UC Irvine. He devotes much time speaking and assisting ARES and local hams around Southern California particularly in the more remote eastern counties.

Carl emphasized that ARES and Races are not rivals but partners in providing emergency communications and personal support to the community during times of need.

Carl presented a discussion of what ARES is, how it is organized and functions within ARRL and FCC. Carl explained that ARES operates predominantly in the mountain and desert counties of our state. The reason being is that the population there is sparse with few governmental agencies existing to serve in times of emergency. That is just the opposite in the highly populated County of Orange. Orange County is made up of many cities featuring police, fire departments, and municipal emergency agencies. In the eastern counties hams, as well as private residents, tend to be isolated and therefore must be more self-sufficient.

Carl explained that, all though ARES members must be licensed, work within the FCC and ARRL rules, and have completed all ICS courses, they actually work with private citizens and community groups such as seniors, schools, tribal groups, local Red Cross, church groups, and neighborhood volunteer associations, rather than established governmental agencies. ARES, to serve successfully, regularly activates before, during, and after disasters depending upon the character of the emergency. However ARES deploys only when requested by a served agency.

RACES (Radio Amateur Civil Emergency Service):
Dan, KI6X introduced the evening's second speaker, Ken Bourne, W6HK. Ken is currently and has been the Orange County RACES Chief Radio Officer. Ken, first licensed in 1956, received his Electrical Engineering degree from Valparaiso University. He then began a long career in amateur radio including as Dupage County

and Illinois State Radio Officer and, later, Dupage County Emergency Coordinator. In 1978 Ken and Carol, N6YL moved to Orange County where he became Races Chief Radio Officer. In 1998 he became California OES Deputy Chief Races Officer and later returned to Orange County as RACES Chief Radio Officer in 2003.

Ken began his electronics career in Chicago at Utica Communications. His professional career included management and vice president of several major electronics companies, managing editor of the world's largest magazine for communications managers and engineers and eventually retirement in 2006. Among many organizations, Ken is a proud Life member of ARRL and IEEE and a member of the Orange County High Tech Service Squad.

Ken presented a very detailed discussion of the RACES organization. OC RACES consists of 22 members. It is not a club but is a service. It exists as an auxiliary communications unit administered by the Orange County Sherriff's Dept.

Ken explained the RACES requirements, purpose and activities. Members must hold a Technician or higher amateur license. They are subject to a strict background check to prove passage of ICS 100, 200, and 700 courses. Members must train for voice, video, and data communication techniques and provide their own emergency radio equipment.

The purpose of RACES, dedicated to emergency service, is outlined in the official purpose of the Amateur Radio Service as described in the FCC rules.

RACES activities, under FCC rules, are restricted to communication with other RACES units except during activation of the War Powers Act by the President of the United States. OC RACES has joined with ACS (Auxiliary Communications Service) under which it is permitted to communicate with organizations beyond only RACES. This arrangement allows OC RACES to participate in practice and community activities regularly in the absence of a War Powers declaration.

Ken noted that OC RACES practices thru activities such as ACS Radio Rodeo, ARRL Field Day, Baker to Vegas, and monthly fox hunts.

It works with other county groups such as the CSUF and UCI RACES, the Hospital Disaster Communications Group, Skywarn, and, of course, ARES. Two emergency activations of particular note have been the Placentia Train Wreck and the recent Windy Ridge Wild Fire.

ARES and RACES:
ARES and RACES agree that they cooperate well by working hand in hand in emergency service. ARES works and serves with local private citizens and their organizations especially in the areas of scattered populations. RACES serves emergency communications for the Sheriff and other county, and municipal agencies. Both groups fill important community service in times of need and complement each other well. Both groups welcome new members and visitors. As such, non-members are invited to sign in to the Monday night RACES net following the roll call of members.

A spirited Q&A period followed until 8:33 pm.

Business Meeting:

Baker Island Report:
Arnie, N6HC, recently returned from Baker Island, spoke briefly of the operation and conditions there. Arnie noted that the group of 13 operators completed over 60,000 QSO's including approximately 16,000 on FT8.

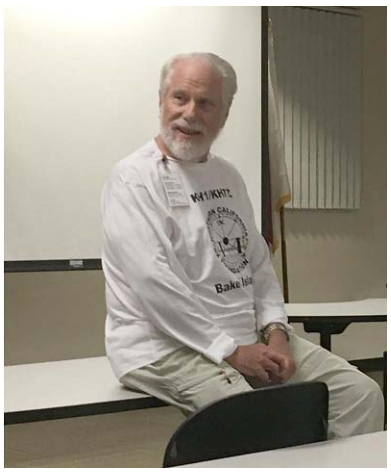

Considering the nearly 25% FT8 QSO result, Arnie predicts that activity in future DXpeditions will change heavily in the direction of FT8.

We congratulate Arnie and the Baker group and look forward to his presentation in an upcoming General Meeting.

Field Day Reports:

Tim, N6GP thanked all who participated in our successful 2018 Field Day. The turnout was great and our score, although not yet official, was greatly improved from 2017. This improved result was accomplished in spite of weak propagation here on the West Coast.

Good of the Club:

Tim, N6GP reminded members of several upcoming weekend contests.

Arnie, N6HC reminded all of the very informative courses offered by CERT (Community Emergency Response Team) and the value of CERT responses to community needs.

Dan, KI6X announced that August's presenter will be Wayne, KH6WZ speaking on encouraging youth radio activities. The meeting adjourned at 9:18 pm.

Submitted by:

Jim Schultz, AF6N OCARC Secretary

"Holy Jim" fire approaches Repeaters on Santiago Peak

Late Breaking – A fire started on August 06 at the base of Santiago Peak in Holy Jim Canyon, By Thursday, Aug 09) the fire approached the commercial and ham radio repeaters on top of Santiago peak. The fire continues to burn in Cleveland Nation Forest between Orange & Riverside Counties

On Thursday afternoon, water tankers drop fire retardant on edge of radio repeaters on top of Santiago Peak.

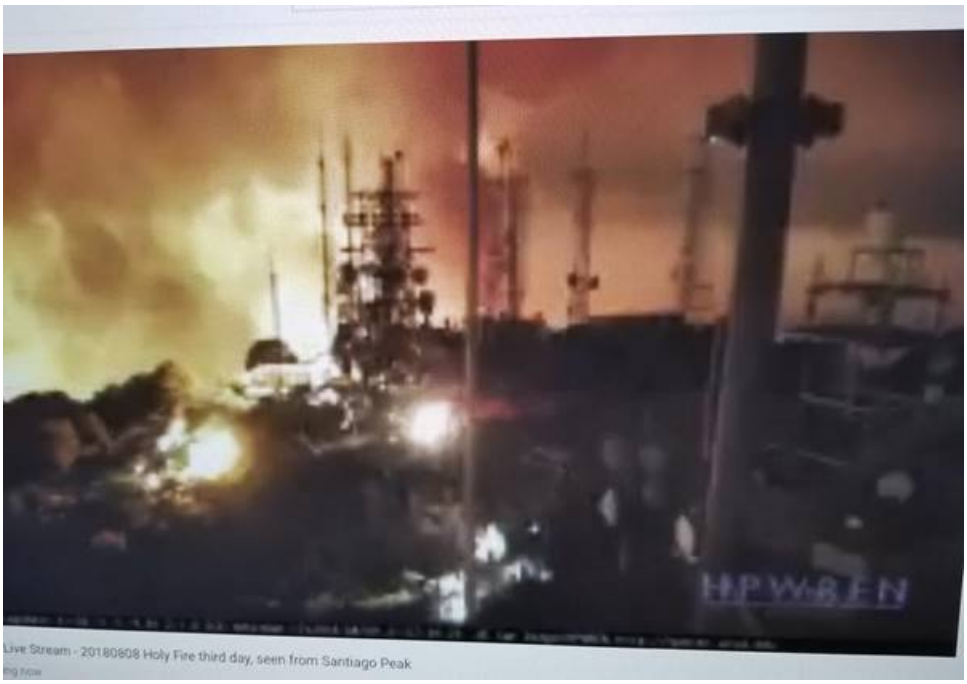

By Thursday night, the fire was approaching the towers of repeaters on Santiago Peak (streaming video quality).

October 6, 2018 Save the Date!

Orange County Amateur Radio Club

2018 Picnic and CQP

Where – Jeffery Open Space Park, Irvine, CA (Southeast corner of Irvine Blvd and Jeffery Road)

When- October 6, 2018, around 10:30. Board of Directors Meeting at 8:00 followed by station/picnic setup.

October 6 is the weekend of the California QSO Party. Come and join fellow OCARC members and guest at the Jeffery Open Space Park for a day radioactive friendship. We are planning to have a station on the air operating in the California QSO Party.

Participants should plan on bringing their own food and drinks. Additional picnic chairs would be a good idea.

Parking is available at the intersection of Shepard and Grassland which is very close to the picnic benches.

Antennas will most likely be a 20M vertical and a few dipoles. There are 40 foot trees at each end of the picnic area offering a chance to try out your antenna launchers. Rigs will be IC-7000 and IC-746Pro.

The facilities include four park benches and clean restrooms. Club popup tents will provide shading.

Members who are unable to attend can still contribute by submitting their CQP logs as an OCARC club submittal.

PUZZLER

Fried Heyn, WA6WZO offered the following Puzzler. It's a good one!

"Exactly where did I take this picture? Maybe you can you name the store?"

HINT: SCP

When you have the answer send it to puzzler@w6ze.org

Orange County Amateur Radio Club
85th Anniversary Coffee Mug

Celebrate 85 Years of OCARC with your Morning Cup O' Joe

Order Form

Call Sign _____ Quantity _____

Name Desired _____

Call Sign _____ Quantity _____

Name Desired _____

Price Each $14.00

Total _____

Please make & mail check to:
OCARC
PO Box 3454
Tustin, CA 92781
or
Bring check to next meeting

2018 is OCARC's 85th Anniversary

Customized Embroidering of the OCARC Logo,

Your Name and Callsign can placed on shirts, jackets, hats, bags, and just about anything you want.

You can either purchase the item from I.Initial or bring in whatever you have and have it embroidered for $10.00.

They have the OCARC logo artwork on file. Delivery takes one to two weeks.

Location: 399 El Camino Real, Tustin, CA 92780

Phone # (714) 573-2552 Online at "iinitial.com"

OCARC Cash Flow - Year To Date

1/1/2018 through 8/4/2018

Category	1/1/2018-8/4/2018
INFLOWS	
Badge Income	2.00
Coffee Mug Sales	196.00
Donation	10.00
Dues, Family (PayPal)	172.89
Dues, Membership	787.50
Dues, Membership (PayPal)	663.09
Field Day Food Income	422.00
Opportunity Drawing -Monthly	303.00
Opportunity Drawing IN - Christmas	100.00
Refreshments Income	59.83
Troop 440 donation from KM6EMP	65.00
TOTAL INFLOWS	**2,781.31**
OUTFLOWS	
CA Statement Of Info filing	20.00
CU service Fee	20.00
Donation to Troop 440 - from Joel KM6EMP	65.00
Field Day - Flowers	53.88
Field Day - Gas	44.85
Field Day Equipment Repairs	20.00
Field Day Food Reinbursement	576.00
Opportunity Drawing - Monthly	137.57
PO Box Rental	70.00
Postage	11.00
Publicity - OCARC Biz Cards	18.29
Refreshments Expense	56.82
Storage Locker	575.00
Supplies	24.33
Web Site Hosting	152.91
TOTAL OUTFLOWS	**1,845.65**
OVERALL TOTAL	**935.66**

Bank balance ~$6,851

MiniTiouner-Express

Digital Amateur Television DVB-S/S2 Receiver / Analyzer

Available at DATV-Express.com

- Operates with Windows PC using free MiniTioune software from Jean-Pierre F6DZP
- Smaller than a stack of 2 decks of cards (picture above is full size)
- Two independent simultaneous RF inputs with internal preamps
- High sensitivity -100dBm @1288MHz – at 1/2 FEC
- Fully assembled/tested in aluminum enclosure
- Covers 144-2420MHz (ideal for Space Station DATV reception)
- Symbol rates from 75 KSymb/s to >20 MSymbols/sec
- Uses external 8-24VDC supply or +5V from USB-3 port (with small modification)
- Real time signal modulation constellation & dBm signal strength display
- Price: US $75 + shipping – order with PayPal

For details & ordering go to www.DATV-Express.com

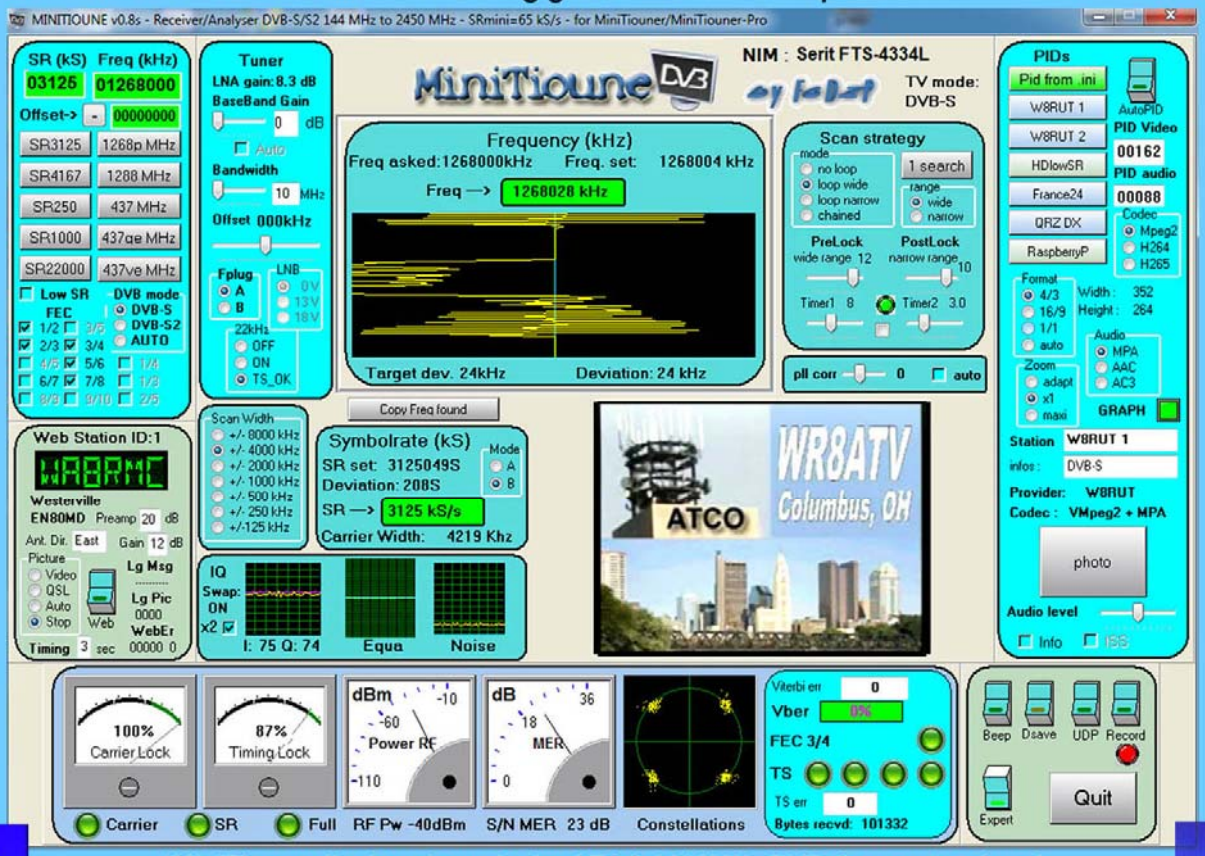

(MiniTioune display above is the ATCO 1268MHz DVB-S repeater signal at WA8RMC QTH 15 miles away).